SPECIFICATIONS (CB-50-S)
1. 4" inlet/outlets Sch. 40. (No-Hub)
2. Liquid capacity: 52 Gallons
3. Solids capacity: 25 Gallons
4. Unit weight w/std. covers: 90 lbs.
5. 16,000 lb. load rated, bolted, gas/water tight composite covers.
6. Maximum operating temperature 190˚F continuous.

NOTES
1. For gravity drainage applications only. Do not use for pressure applications.
2. 3/8" thick seamless high density polyethylene walls.
3. Unit supplied with built-in adapter for up to 3-1/2" of adjustability. Additional riser(s) are also available for deeper burial depth.
4. Cover placement allows full access to tank for proper maintenance.
5. Designed narrow footprint allows clearance through doorways and down stairwells.
6. Inlet and outlet diffusers are removable to inspect or clean piping.
7. For on-the-floor or buried applications.
8. Integral Air Relief / Anti-siphon.

ENGINEER SPECIFICATION GUIDE
Schier SettlerÊ catch basin model #_____ shall be lifetime guaranteed and Made in USA of seamless, rotationally-molded High Density Polyethylene with minimum 3/8" uniform wall thickness. Interceptor shall be furnished for below-grade installation with cast iron highway-rated cast iron grate or gasketed, solid composite cover. Interceptor shall be provided with outlet connection and optional inlet connection.

OPTIONS:
- Å Teleglide field adjustable risers for extending covers to grade
- Å Male pipe thread connections
- Å High water anchor kit (set of 2)
- Å Highway rated pickable composite cover

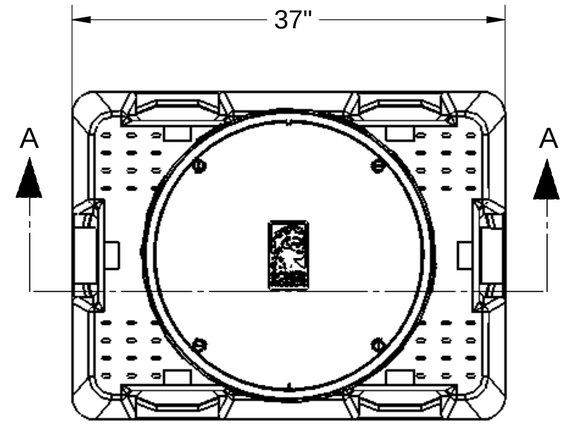

TOP VIEW

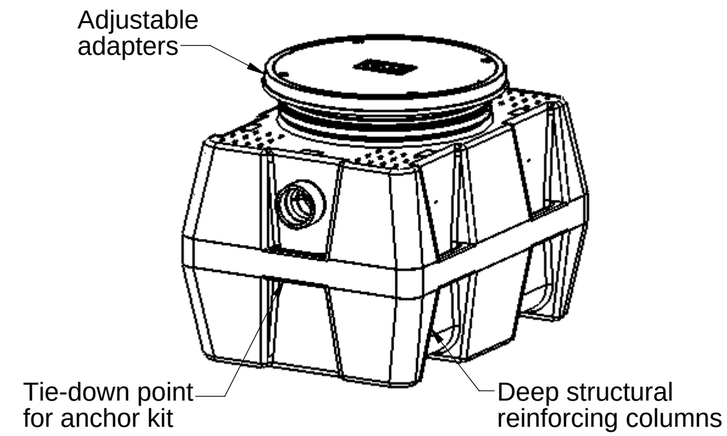

ISOMETRIC VIEW

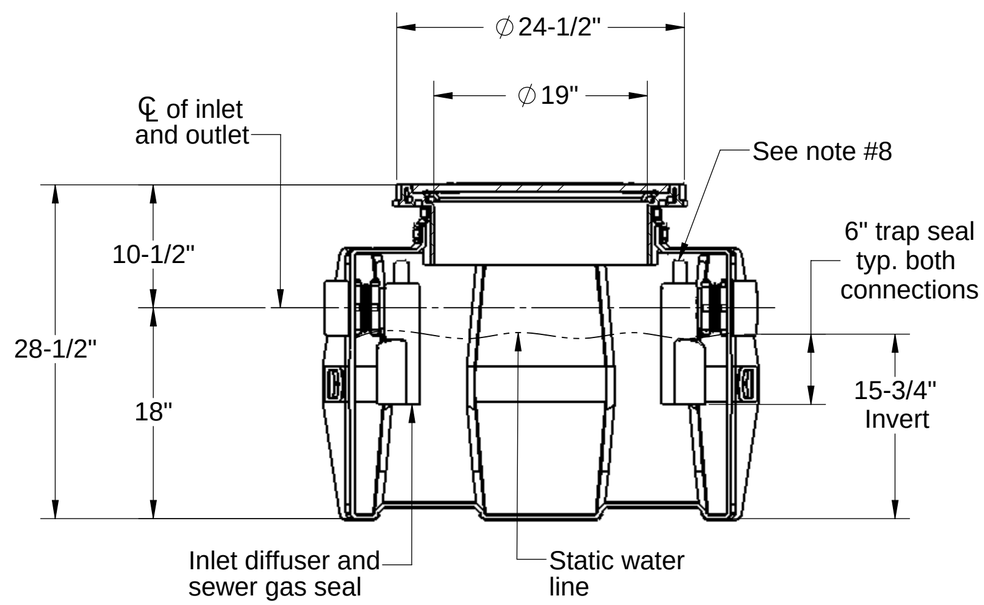

SECTION "A-A"

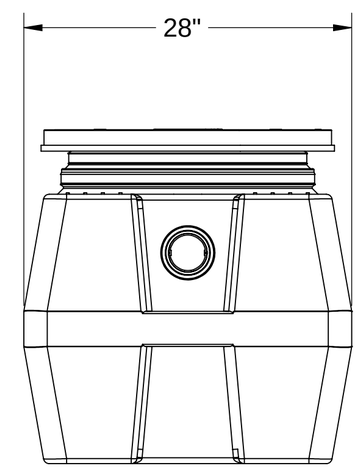

END VIEW

grease interceptors | oil separators | solids interceptors | chemical waste tanks | process systems

PROPRIETARY AND CONFIDENTIAL

THE INFORMATION CONTAINED IN THIS DRAWING IS THE SOLE PROPERTY OF **SCHIER PRODUCTS**. ANY REPRODUCTION IN PART OR AS A WHOLE WITHOUT THE WRITTEN PERMISSION OF **SCHIER PRODUCTS** IS PROHIBITED.

PART NUMBER: CB-50-S

SPECIFICATION SHEET

DESCRIPTION:
SETTLER SERIES 52 GALLON LIQUID STORAGE CAPACITY POLYETHYLENE CATCH BASIN WITH HIGHWAY RATED COMPOSITE COVER

DWG BY: TEU	DATE: 12/21/11	REV: 1 - 2/15/12	MATL: PE

Schier Products
9500 Woodend Road
Edwardsville, KS 66111
Tel: 800-827-7119
Fax: 800-827-9664
www.schierproducts.com

Made in the U.S.A

SCHIER PRODUCTS
Pioneering Drain Line Purity