MOEN®

Specifications

DESCRIPTION
- Component construction with various finishes identified by suffix
- Pressure balancing cycle valve design with an adjustable temperature limit stop
- 1/2" IPS/CC connections
- Includes valve, showerhead, tub spout, arm and flange

OPERATION
- Lever style handle
- Handle operates counterclockwise through a 270˚arc with off at 6 o'clock and maximum hot at the 9 o'clock position. Shut off in clockwise direction
- Adjustable temperature limit stop to control maximum hot water temperature
- Pressure balancing mechanism maintains selected discharge temperature to ± 2°

FLOW
- Designed to deliver 1.75 gpm (6.6 L/min)
  (for models manufactured after 3/1/18)
- Designed to deliver 2.5 gpm (9.5 L/min)
  (for models manufactured before 3/1/18)

STANDARDS
- Third party certified to ASME A112.18.1/CSA B-125.1 and all applicable requirements referenced therein
- **ADA** for lever handle
- Meets WaterSense® criteria
- Meets New York City Local Law No. 57
- Products marked with 1.75 gpm are compliant with WaterSense®, and California water efficiency regulations

WARRANTY
- Lifetime limited warranty against leaks, drips and finish defects to the original homeowner
- 10 year limited warranty when used in a multifamily installation
- 5 year limited warranty when used in a commercial installation

Visit www.moen.com/support for complete details and limitations

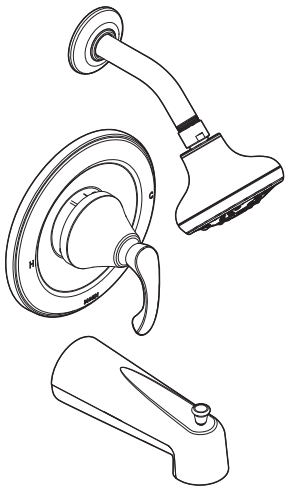

Tiffin™
Posi-Temp®
Single-Handle Tub/Shower

MODEL: 82876 Series

Showerhead · Pomme de douche · Cabezal de ducha
WaterSense
Meets EPA Criteria
Certified by IAPMO R&T

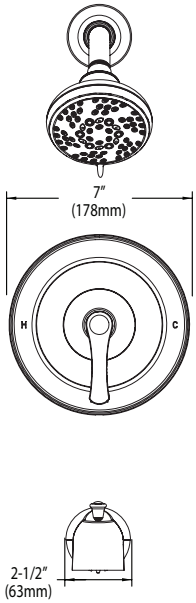

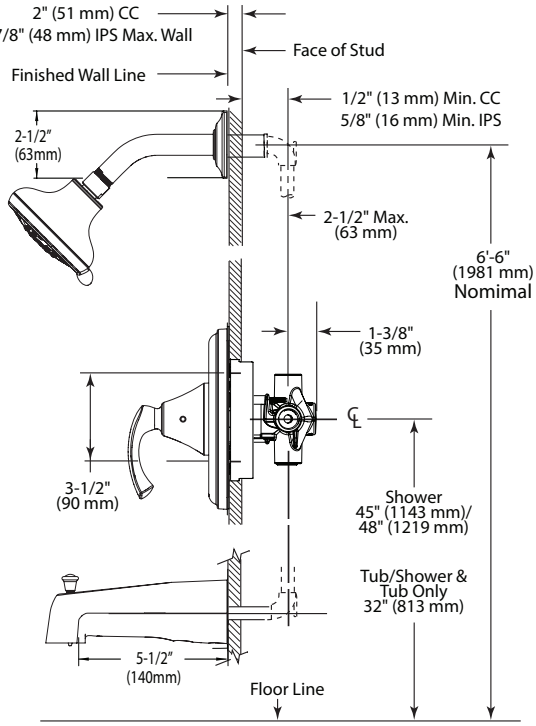

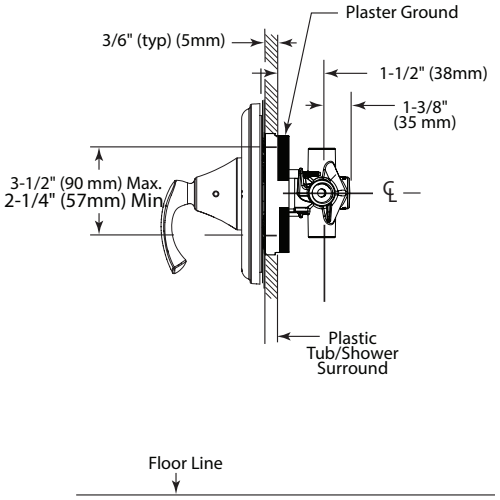

CRITICAL DIMENSIONS

(DO NOT SCALE)

FOR MORE INFORMATION CALL: 1-800-BUY-MOEN
www.moen.com

07/12/2018 SPC1-4673 500000193579
Released 06