Your Peace of Mind is Our Top Priority®

Product information presented here reflects conditions at time of publication. Consult factory regarding discrepancies or inconsistencies.

ZOELLER®
PUMP COMPANY
Zoeller Family of Water Solutions™

MAIL TO: P.O. BOX 16347 • Louisville, KY 40256-0347
SHIP TO: 3649 Cane Run Road • Louisville, KY 40211-1961
(502) 778-2731 • 1 (800) 928-PUMP • FAX (502) 774-3624

SECTION: 4.10.125
FM1597
0414
Supersedes
1109

visit our web site: www.zoeller.com

NEMA-4X WATERTIGHT JUNCTION BOXES

ECONOMY (Field Assembled)

PVC Plastic box with removable cover for use in sewage, effluent, dewatering, or corrosive environments. Box is 4" X 4" X 2" deep. Box is field drilled for maximum flexibility in each installation.

10-0770 Box includes 2 UF cord seals for 12 or 14 gage UF cable and 3 round cord seals for 16-3, 16-2, 18-3, or 18-2 SO type cords.

10-0776 Box includes one ¾" PVC conduit adapter and 3 round cord seals for 16-3, 16-2, 18-3, 18-2 SO type cords.

10-0777 Box includes one ¾" PVC conduit adapter and 4 round cords seals for 16-3, 16-2, 18-3, 18-2 SO type cords.

10-0778 Box includes one ¾" PVC conduit adapter and 5 round cord seals for 16-3, 16-2, 18-3, 18-2 SO type cords.

Model 10-0770

DELUXE (Factory Assembled)

UL Listed and CSA Certified high impact, corrosion resistant, weatherproof thermoplastic enclosure with flexible PVC gasket and stainless steel screws. Preassembled at the factory for convenience and ease of installation.

Pump Model	Type	"L"	"W"	"H"	Hub Size	Cord Grips	Part No.
51, 53, 55, 57, 59, 98, 137, 139, 140, 142, 151,152, 153, 161 (except 115V), 163 (except 115V), 165, 185, 186 (3 phase), 188 (3 phase), 189 (460 & 575V), 264, 266, 267, 268, 270, 282, 284, 293, 294 (3 phase), 295 (460V & 575V only), 404 (230/460/575V 3 phase), 405 (230/460/575V 3 phase) and all effluent STEP Systems.	Simplex	4"	4"	4"	¾"	4 Small & 1 Plug	10-1398
	Simplex	4"	4"	4"	1½"	4 Small & 1 Plug	10-1399
	Simplex	6"	6"	4"	1½"	4 Small & 1 Plug	10-1402
	Simplex/ Duplex	6"	6"	4"	1"	5 Small & 1 Plug	10-1401
	Duplex	6"	6"	4"	1"	6 Small & 1 Plug	10-1633
	Duplex	6"	6"	4"	2"	5 Small & 1 Plug	10-1403
161 (115V), 163 (115V), 186 (single phase), 188 (single phase), 189 (200 & 230V), 191, 292, 294 (single phase), 295 (200 & 230V), 404 (single phase & 200V 3 phase), 405 (single phase & 200V 3 phase).	Simplex	6"	6"	4"	1½"	3 Small, 1 Large & 1 Plug	10-1404
	Duplex	6"	6"	4"	2"	4 Small, 1 Large & 1 Plug	10-1405

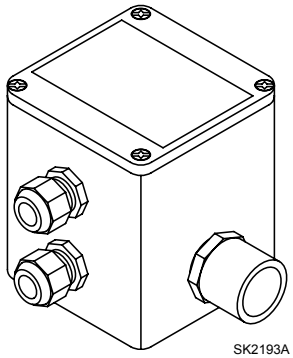

SK2193A

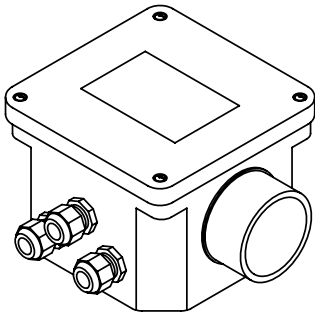

SK2193B

Note: Small cord grips are for 16 ga. and 18 ga. cable.
Large cord grips are for 12 ga. 4 conductor cable and 14 ga. 4 conductor cable.

© Copyright 2014 Zoeller Co. All rights reserved.

SEWAGE/WASTE JUNCTION BOXES

NEMA-4X Junction Boxes are electrical enclosures that are watertight, dust-tight, and corrosion resistant. Boxes are completely assembled with cord seals and terminal strip for easy field wiring.

Pump Model	Type	"L"	"W"	"H"	Hub Size	Cord Grips	Part No.
611, 621, 631 641, 651, 661 (under 20 AMPS)	Simplex	6"	6"	4 3/8"	¾"	1 each - Pump 3 each - Floats	10-0985
	Duplex	8"	8"	4½"	2"	2 each - Pump 4 each - Floats	10-1015
651, 661 (20 AMPS & up)	Simplex	6"	6"	4 3/8"	1½"	3 each - Pump 1 each - Floats	10-0987
	Duplex	8"	8"	4½"	2"	4 each - Pump 4 each - Floats	10-1016

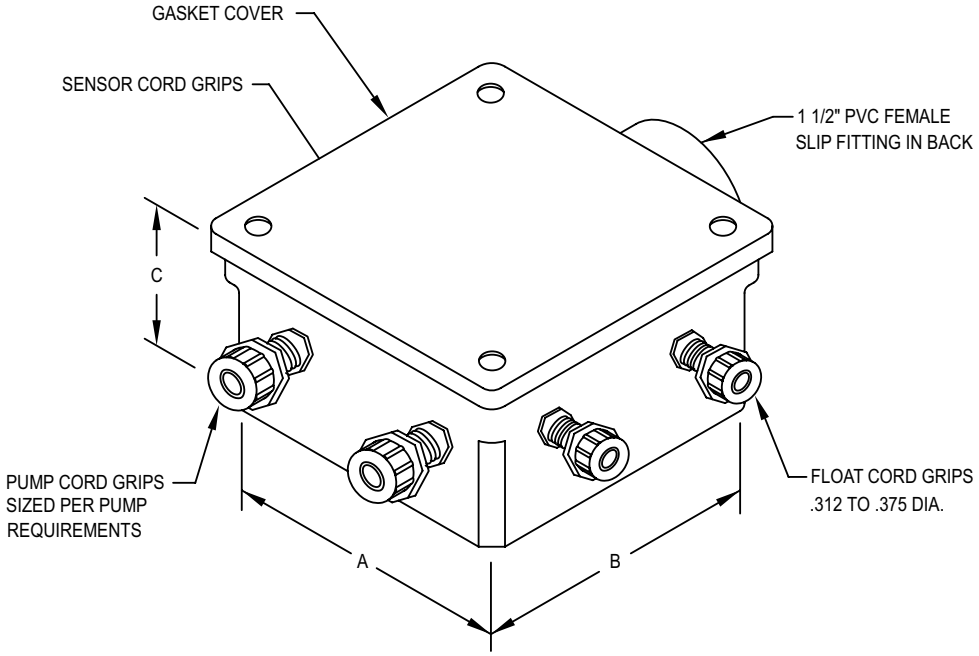

STARTER KITS

A Starter kit is required for all single phase model 611, 621, 631, 641, and 651 pumps. A Starter kit consists of the single phase capacitors and relay required to run the pump. These components are shipped loose and are installed into the pump's control panel.

Starter Kit P/N	Pump Model
10-0914	611/621 (before 10/1/07)
10-2221	611/621 (after 10/1/07)
10-0915	631/641
10-1434	651

ZOELLER® PUMP COMPANY

MAIL TO: *P.O. BOX 16347 • Louisville, KY 40256-0347*
SHIP TO: *3649 Cane Run Road • Louisville, KY 40211-1961*
(502) 778-2731 • 1 (800) 928-PUMP • FAX (502) 774-3624

Your Peace of Mind is Our Top Priority®

visit our web site:
www.zoeller.com

© Copyright 2014 Zoeller Co. All rights reserved.