SALO MANUFACTURING, INC.
52 12TH STREET SE
MENAHGA, MN 56464
PHONE: 218-564-7256
www.salomfg.com

Tub/Shower Combination

MODEL T460

4-piece remodeler

Width:	60"
Depth:	33 1/4"
Height:	73 1/4"

Units available in:
Left-Hand Plumbing
Right-Hand Plumbing

Ceiling dome available.

Acrylic towel bar is standard.

Floor to Floor: 1 1/2"

All dimensions may vary.

Salo products are independently certified to meet ANSI Z 124 and HUD Bulletin 73A requirements.

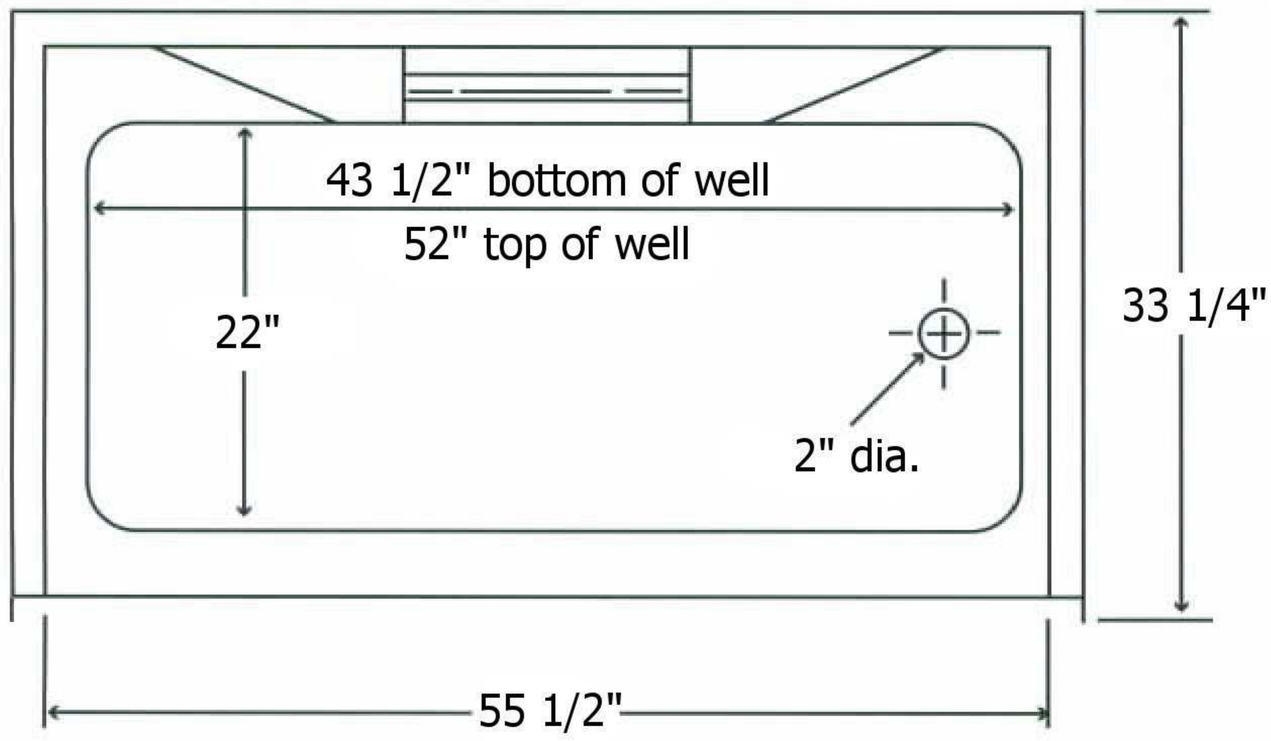

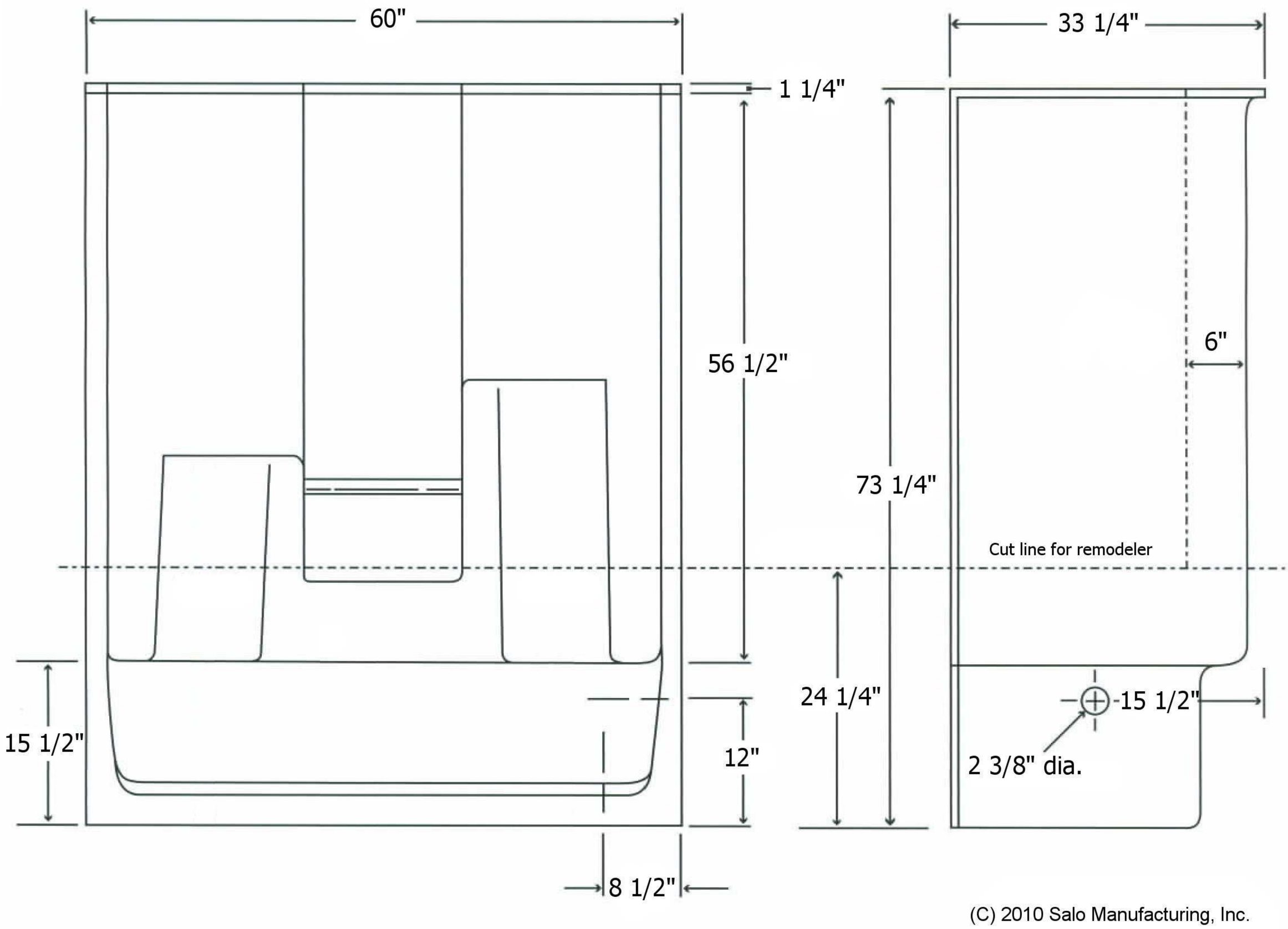

(C) 2010 Salo Manufacturing, Inc.