MOEN

Buy it for looks. Buy it for life.®

Specifications

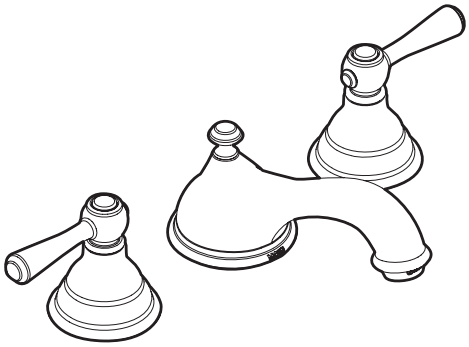

KINGSLEY™
Two-Handle Widespread Lavatory Faucet

Models: T6105 series

NOTE: THIS FAUCET IS DESIGNED TO BE INSTALLED THRU 3 HOLES, 1" MIN. DIA.

WaterSense Meets EPA Criteria
Certified by IAPMO R&T

DESCRIPTION
- Hydrolock™ quick connect system
- Metal construction with various finishes identified by suffix
- 1/2" IPS connections
- Includes hot and cold indicators
- Includes metal pop-up type waste assembly

OPERATION
- Lever style handles
- Maximum handle rotation angle is 90˚ to full on for either handle
- Hot side counterclockwise to open (clockwise to close)
- Cold side clockwise to open (counterclockwise to close)

FLOW
- Flow is limited to 1.5 gpm max (5.7L/min) at 60 psi, for products made before October 2008 flow is limited to 2.2 gpm max (8.3 L/min)

CARTRIDGE
- 1224 cartridge design
- Nonmetallic and stainless steel material

STANDARDS
- Third party certified to WaterSense,® ASME A112.18.1/CSA B-125.1, ICC A117.1 and all applicable requirements referenced therein
- Certified to ANSI/NSF 61/9
- Complies with California Proposition 65 and with the Federal Safe Water Drinking Act
- **ADA** for lever handle

WARRANTY
- Lifetime limited warranty against leaks, drips and finish defects to the original consumer purchaser
- 5 year warranty if used in commercial installations

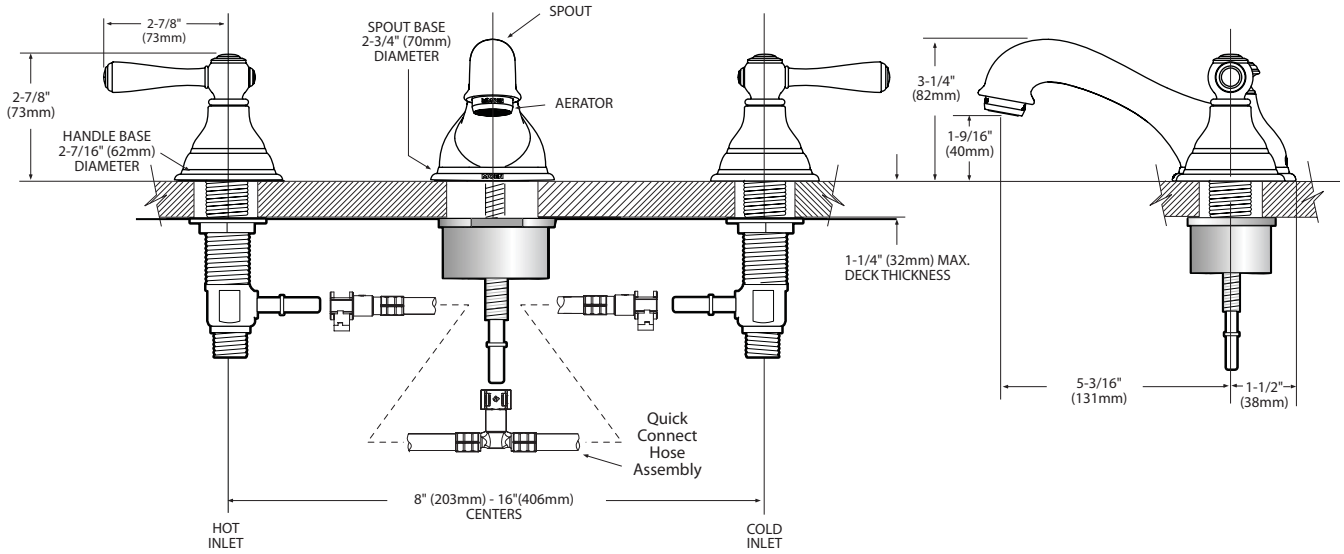

CRITICAL DIMENSIONS

(DO NOT SCALE)