MOEN®
COMMERCIAL

Specifications

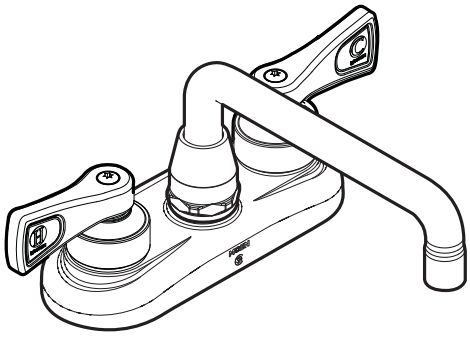

Two-Handle Bar/Pantry Faucet

Model: 8273

NOTE: Designed to be installed through 2 holes - 1" min. dia.

FAUCET DESCRIPTION
- Brass construction with chrome plated finish
- 4" centerset
- 1/2" IPS connections

OPERATION
- Lever handles with hot and cold color indicators
- Vandal resistant torx head screws

FLOW
- Aerator is limited to 2.2 GPM max (8.3L /min)

CARTRIDGE
- Brass shell, ceramic disc cartridge
- 1/4 turn operation

STANDARDS
- Third party certified to ASME A112.18.1/CSA B-125.1, ICC A117.1 and all applicable specifications referenced therein
- Certified to ANSI/NSF 61/9
- Complies with California Proposition 65 and with the Federal Safe Drinking Water Act
- ADA for lever handles

WARRANTY
- Warranted for five years against material or manufacturing defects

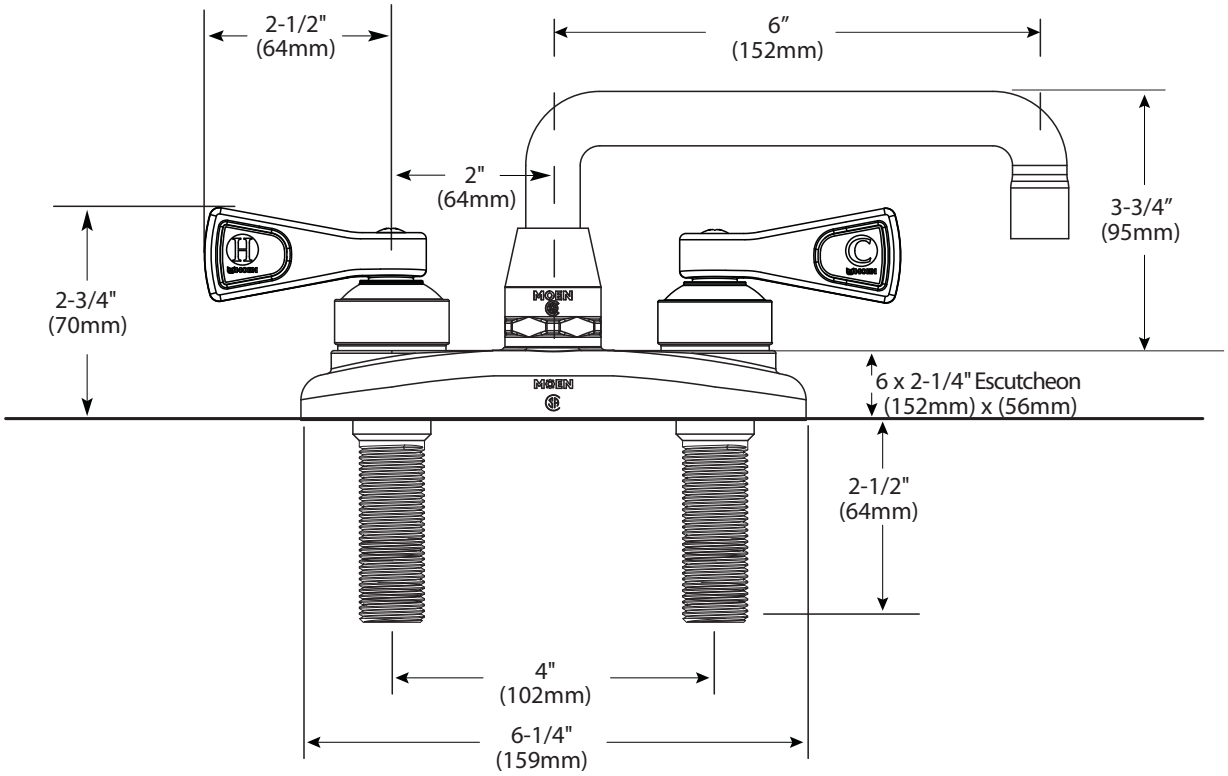

CRITICAL DIMENSIONS

(DO NOT SCALE)