KOHLER®

Roughing-In

K-T14419
PURIST®
LAMINAR WALL-MOUNT FAUCET

Product Information

Applicable product*:	
Laminar wall-mount faucet – cross handles	K-14419-3
Laminar wall-mount faucet – lever handles	K-14419-4
*Valve must be ordered to complete product.	
Handles are ADA compliant.	ADA

Required accessory:	
Two-handle ceramic valve	K-410-K

Installation Notes

Install this product according to the installation guide.

The distance between the bottom of spout and top of the fixture rim must be no less than 1-1/2″ (3.8 cm) and no greater than 6″ (15.2 cm).
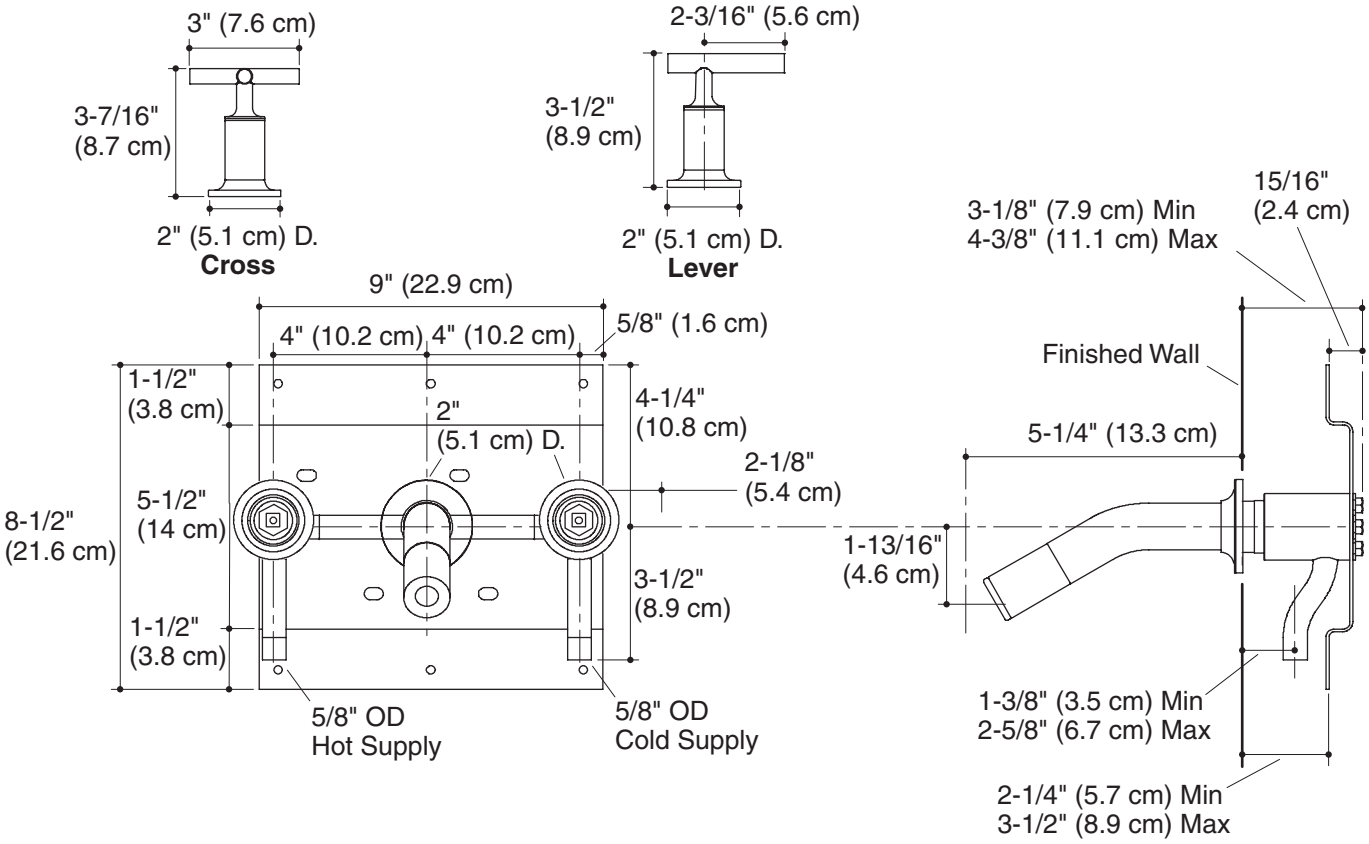
Three 1-1/2″ (3.8 cm) diameter cutout holes are required for the spout and handles.