KOHLER®

Roughing-In

K-8763, K-8762
ESSEX ™
KITCHEN SINK FAUCET

Product Information

Applicable products:	
Kitchen sink faucet with accent handspray	K-8763
Kitchen sink faucet with classic handspray	K-8763-BX
Kitchen sink faucet less handspray	K-8762
Handles comply with the actuation force Accessibility Guidelines (Section 309 Operation) of the Americans with Disabilities Act.	**ADA**

Optional accessories:	
10-1/2″ (26.7 cm) escutcheon plate for three hole installations	K-14511

Installation Notes

Install this product according to the installation guide.
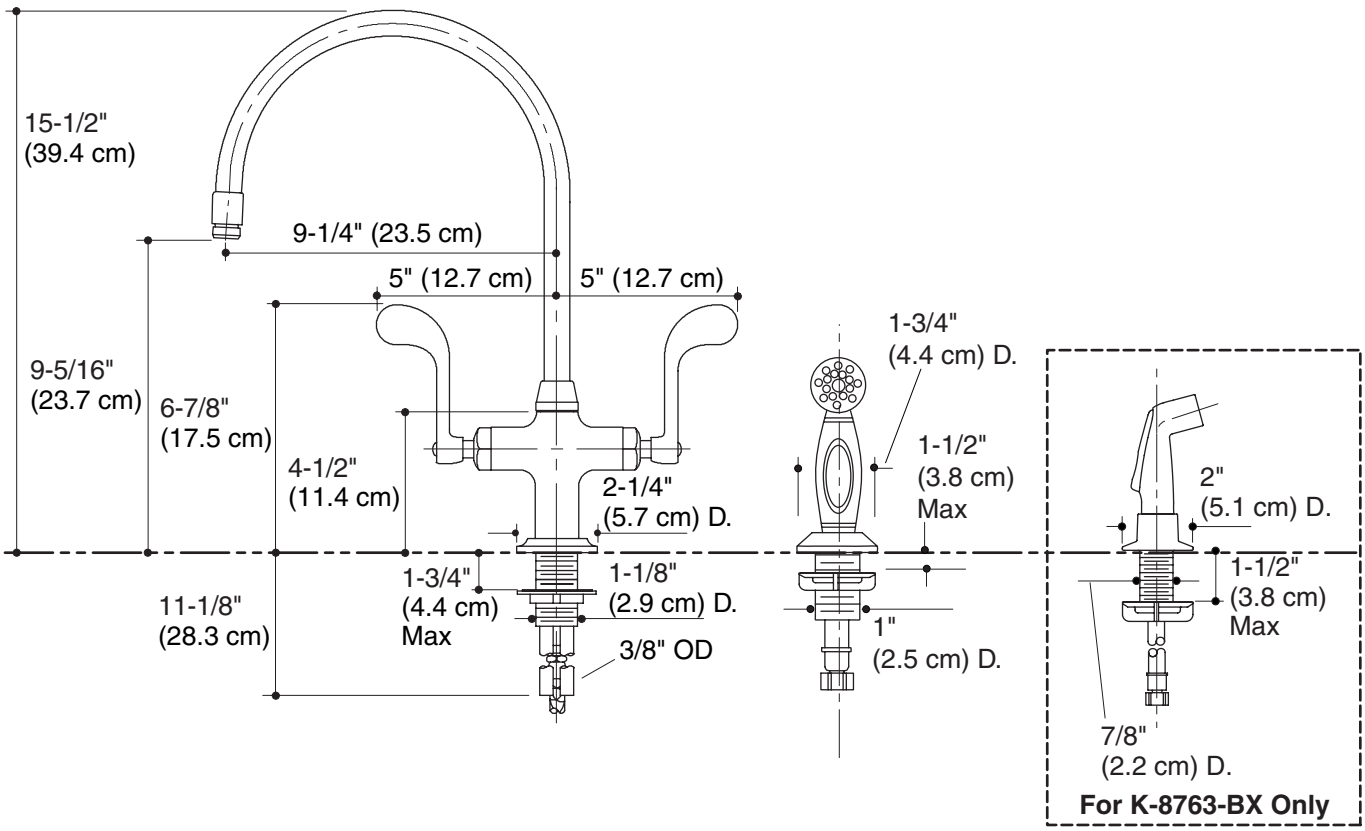
Lower flow aerator options are available - please refer to the Kohler Price Book.