KOHLER®

Roughing-In

K-3723
PERSUADE® CURV
DUAL FLUSH TOILET

Product Information

Applicable product:	
Dual flush toilet – center push-button	K-3723

Fixture:	
Configuration	Two-piece, elongated
Water per flush	1.6 gpf (6 lpf) or 1.0 gpf (3.8 lpf)
Passageway	2″ (51 mm)
Water area	4-1/2″ (114 mm) x 5-3/4″ (146 mm)
Water depth from rim	8-1/2″ (216 mm)
Seat post hole centers	5-1/2″ (140 mm)

Included components:	
Bowl	K-4353
Tank	K-4441
Tank cover	1115480
Push buttons	1072961

Installation Notes

IMPORTANT! The rough-in must be 12″ (305 mm) or more from the base of the wall or baseboard. Install or relocate the supply and outlet as necessary to conform to rough-in dimensions.

If this toilet is installed to new construction, install a new supply stop following the dimensions in the diagram.

In installations with the supply stop installed, the existing supply stop may need to be relocated if it is less than 8-1/2″ (216 mm) from the centerline of the toilet. Dry fit the toilet to confirm if the supply stop needs to be relocated.

The supplied hose will extend roughly 6″ (152 mm) from the toilet. If the supplied hose does not reach the supply stop, a longer supply hose may be used.
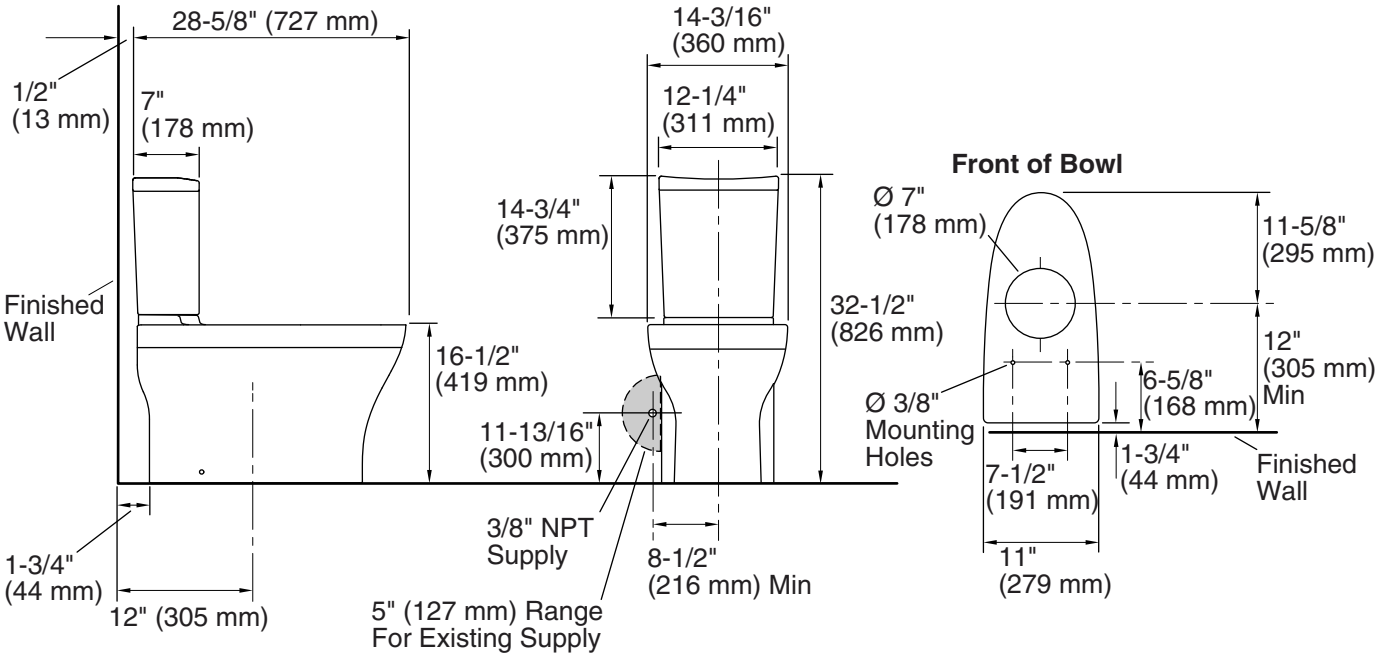
Fixture conforms to ASME Standard A112.19.2/CSA B45.1. All dimensions are nominal.