KOHLER®

Roughing-In

K-3555
REVIVAL®
TOILET

Product Information

Fixture:	
Configuration	2-piece, elongated
Water per flush	1.6 gallons (6 L)
Passageway	2″ (5.1 cm)
Water area	10-1/4″ (26 cm) x 9-1/8″ (23.2 cm)
Water depth from rim	6-1/2″ (16.5 cm)
Seat post hole centers	5-1/2″ (14 cm)
Included Components:	
Bowl	K-4355
Tank	K-3613
Tank cover	83037
Seat	K-4615
Bolt cap accessory pack	52048
Tank accessory pack	52153
Flush actuator	K-9446

Installation Notes

Install this product according to the installation guide.
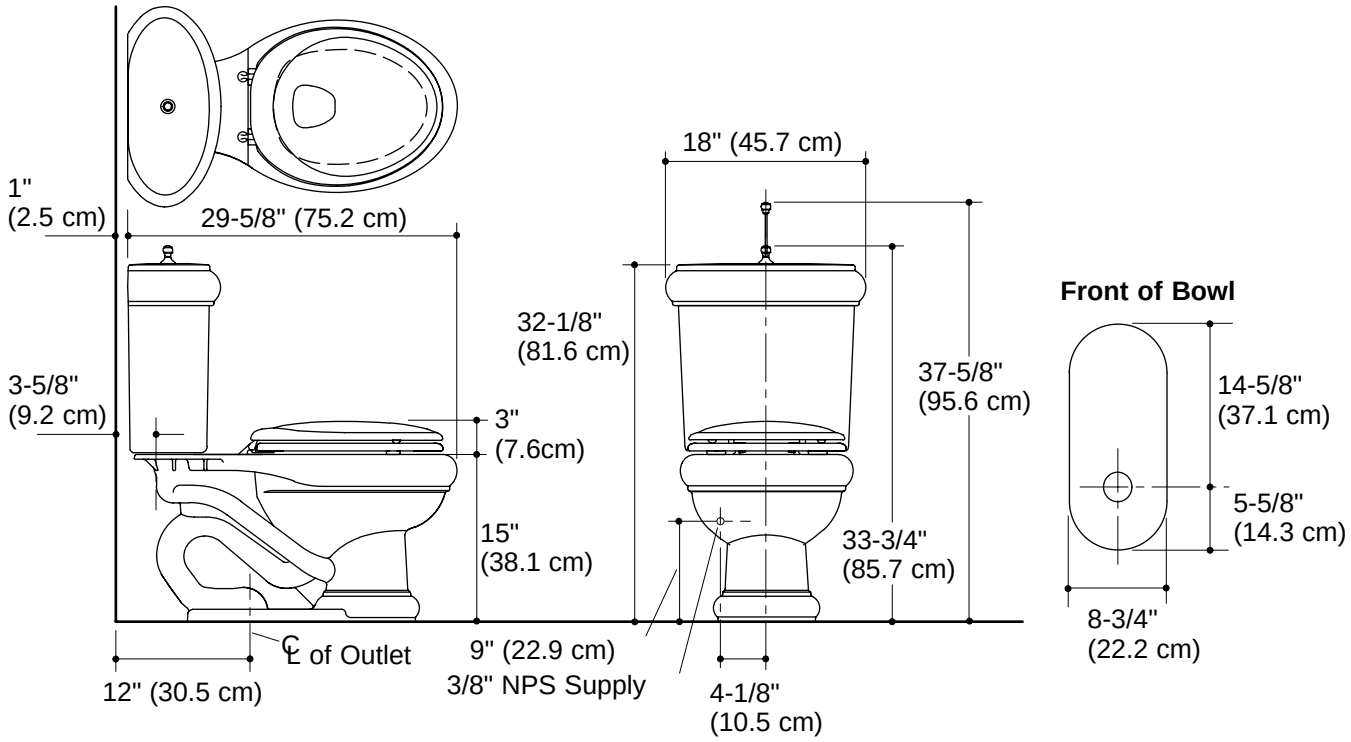
Fixture dimensions are nominal and conform to tolerances in ASME Standard A112.19.2.