KOHLER®

Roughing-In

K-3468
SERIF®
COMFORT HEIGHT™ TOILET

Product Information

Applicable product:	
Elongated bowl toilet - concealed trapway	K-3468

Fixture:	
Configuration	two-piece, elongated
Water per flush	1.6 gal (6 L)
Passageway	2-1/8″ (5.4 cm)
Water area	10-1/2″ (26.7 cm) x 9-1/4″ (23.5 cm)
Water depth from rim	5-1/2″ (14 cm)
Seat post hole centers	5-1/2″ (14 cm)

Included components:	
Bowl	K-4278
Tank	K-4608
Tank cover	1032188
Flush actuator	83725
Bolt cap accessory pack	1013092
Tank accessory pack	73062

Installation Notes

Install this product according to the installation guide.

*Indicates maximum lift of trip lever during actuation.
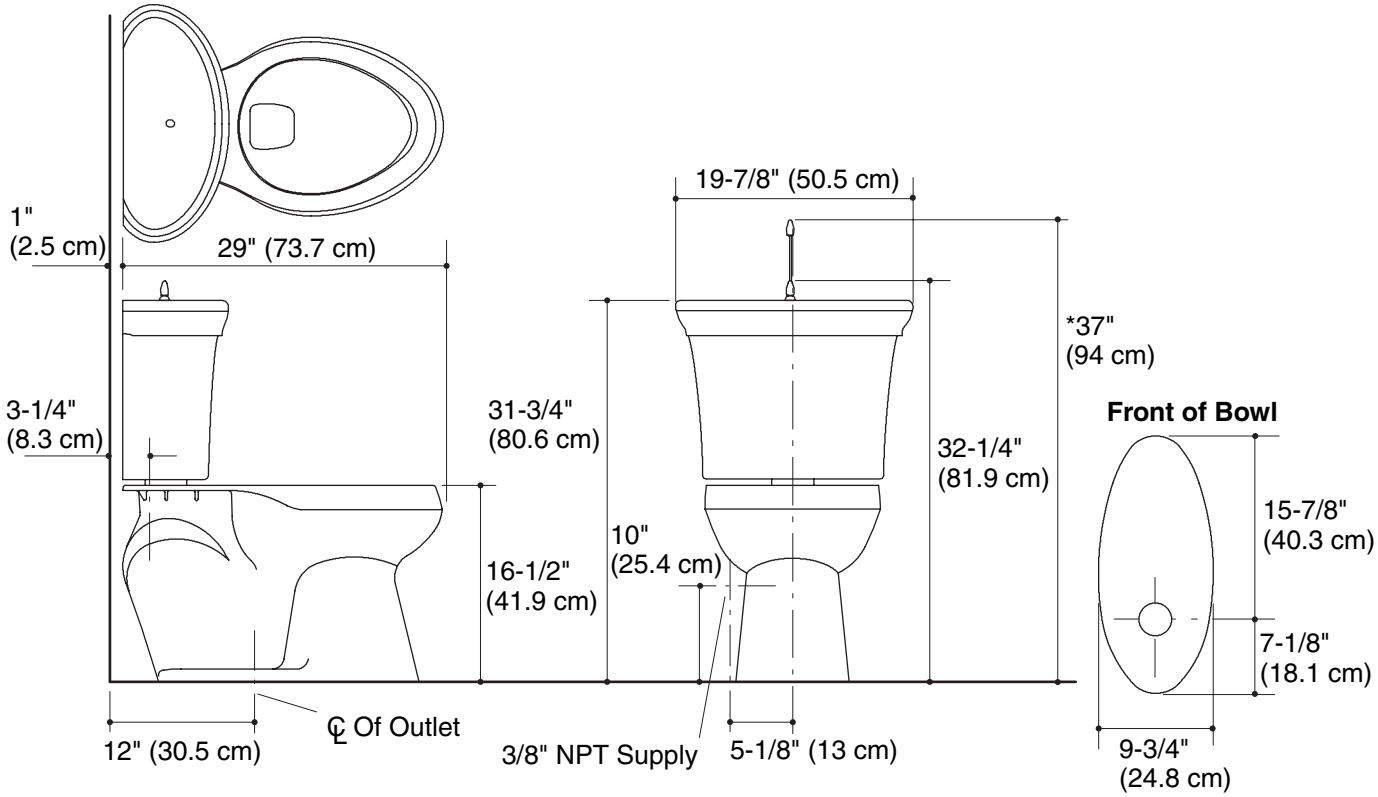
Fixture dimensions are nominal and conform to tolerances in ASME Standard A112.19.2.