KOHLER®

Roughing-In

K-3427
HIGHLINE®
COMFORT HEIGHT™ COMBINATION ELONGATED TOILET

Product Information

Applicable product:		
Combination elongated toilet	left-hand	K-3427
Combination elongated toilet	right-hand	K-3427-RA
Insuliner® insulated tank lining	left-hand	K-3427-U
Insuliner insulated tank lining	right-hand	K-3427-UR
Insuliner insulated tank lining and tank cover locks	left-hand	K-3427-UT
Tank cover locks	left-hand	K-3427-T
Tank cover locks	right-hand	K-3427-TR
Bedpan lugs	left-hand	K-4274-L / K-4620
Bedpan lugs	right-hand	K-4274-L / K-4620-RA
Product will comply with the Americans with Disabilities Act when installed per the requirements of the Accessibility Guidelines, Water Closets, of the Act.		ADA

Fixture:	
Configuration	two-piece, elongated
Water per flush	1.6 gallons (6 L)
Passageway	2″ (5.1 cm)
Water area	11-1/8″ (28.3 cm) x 9-1/2″ (24.1 cm)
Water depth from rim	6″ (15.2 cm)
Seat post hole centers	5-1/2″ (14 cm)

Included components:		
Bowl	– less bedpan lugs **OR**	K-4274
	– with bedpan lugs	K-4274-L
Tank	– left-hand trip lever **OR**	K-4620
	– right-hand trip lever	K-4620-RA
Tank cover		84591
Trip lever		K-9404

Installation Notes

Install this product according to the installation guide.

To comply with the Accessibility Guidelines of the Americans with Disabilities Act, install an open front seat.
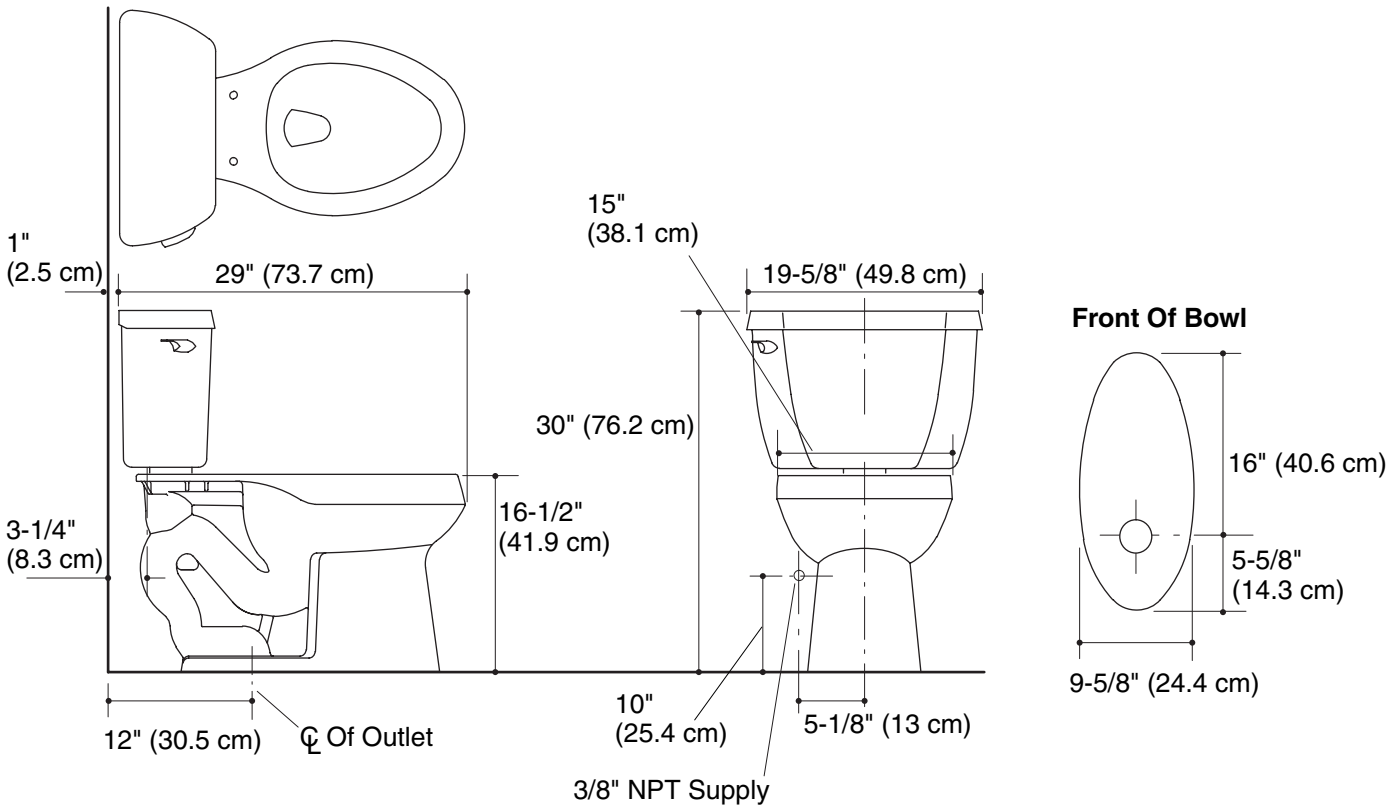
Fixture dimensions are nominal and conform to tolerances in ASME Standard A112.19.2.