KOHLER®

Roughing-In

K-3246
BALLAD
SELF-RIMMING KITCHEN SINK

Product Information

Applicable product:		
4-hole kitchen sink	K-3246-4	shown
3-hole kitchen sink	K-3246-3	shown

Fixture*:	
Basin areas	13-3/8″ (34 cm) x 15-5/8″ (39.7 cm)
Water depth	7-1/2″ (18.4 cm)
Drain holes	3-5/8″ (9.2 cm) D.
Faucet holes	1-7/16″ (3.7 cm) D.
*Approximate measurements for comparison only.	

Included components:	
Fastener pack	1023180

Installation Notes

Install this product according to the installation guide.

Cutout should be 32-1/2″ (82.6 cm) x 21-1/2″ (54.6 cm) with 1/2″ (1.3 cm) radius corners.
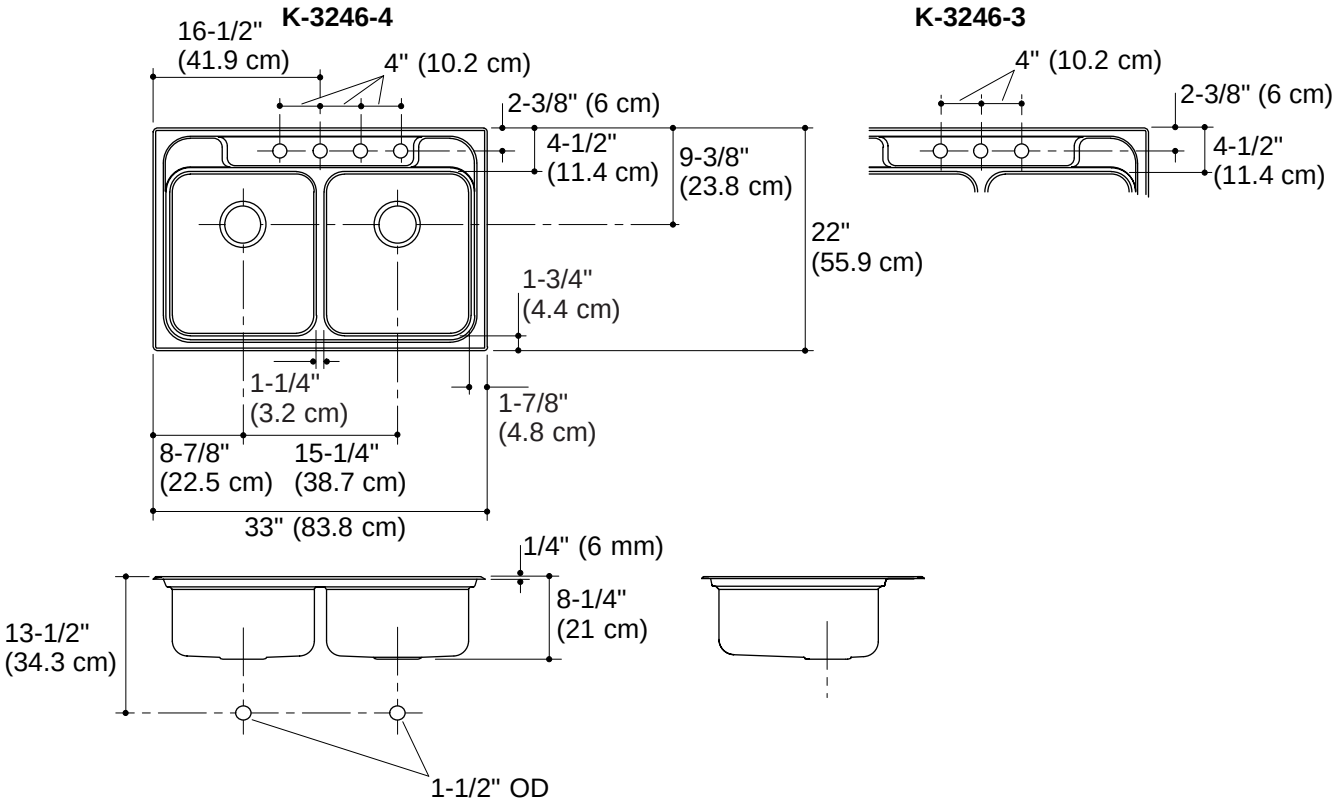
Fixture dimensions are nominal and conform to tolerances in ASME Standard A112.19.3.