KOHLER®

Roughing-In

K-3224
RAVINIA™
SELF-RIMMING KITCHEN SINK

Product Information

Applicable product:		
4-hole sink	K-3224-4	shown
3-hole sink	K-3224-3	shown
2-hole sink	K-3224-2	shown

Fixture*:	Basin area	Water depth
Sink, left	14″ (35.6 cm) x 18″ (45.7 cm)	7-1/4″ (18.4 cm)
Sink, right	14″ (35.6 cm) x 15″ (38.1 cm)	7-1/4″ (18.4 cm)
Drain holes	3-5/8″ (9.2 cm) D.	
Faucet holes	1-7/16″ (3.7 cm) D.	
* Approximate measurements for comparison only.		

Included components:	
Fastener pack	1023180

Installation Notes

Install this product according to the installation guide.

Cutout has 32-1/2″ (82.6 cm) x 21-1/2″ (54.6 cm) with 1-1/2″ (3.8 cm) radius corners.
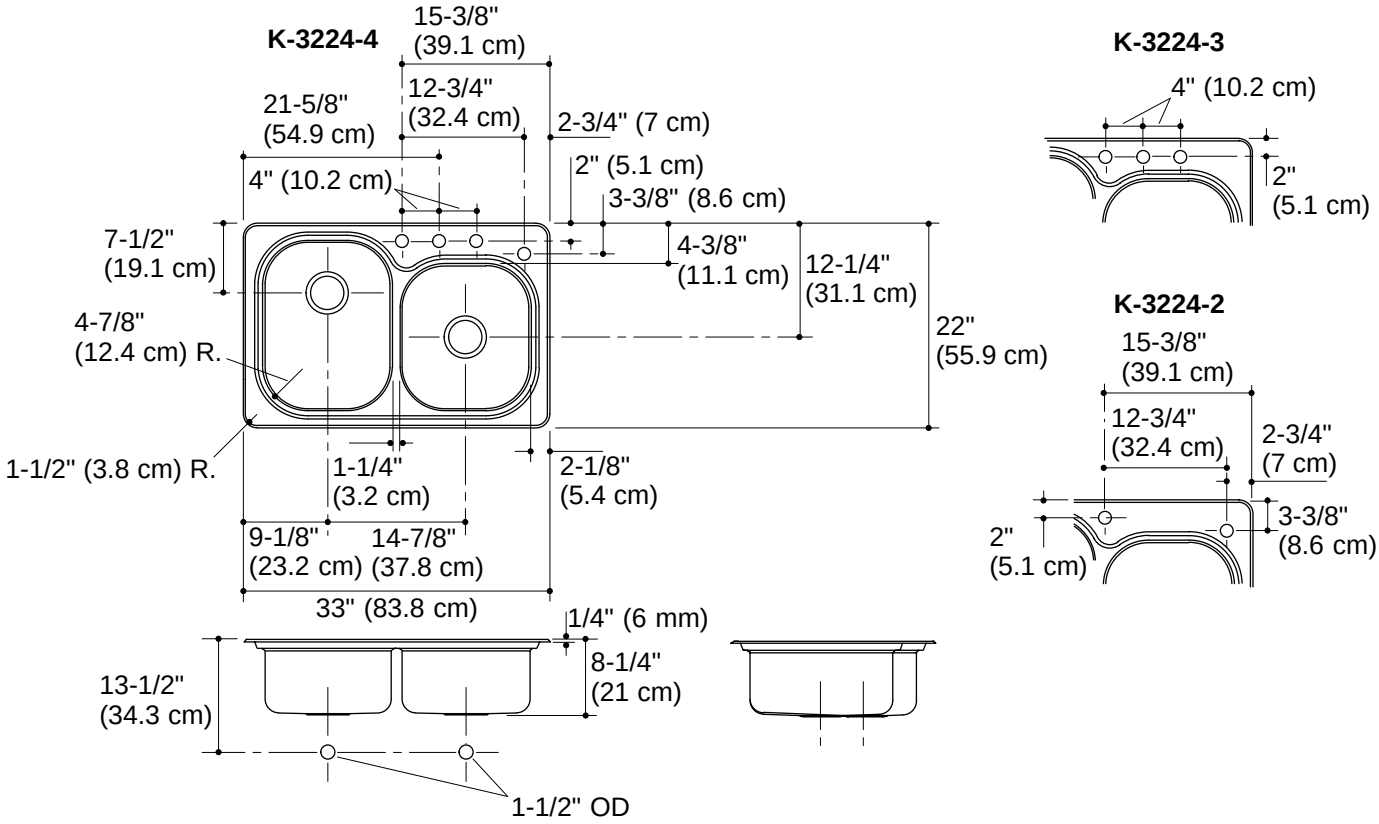
Fixture dimensions are nominal and conform to tolerances in ASME Standard A112.19.3.