KOHLER®

Roughing-In

K-2098
INVITATION™
COUNTERTOP LAVATORY

Product Information

Mexico products have an **M** after the first sequence of numbers (such as K-12345 **M**)		
4″ (10.2 cm) centers lavatory	K-2098-4	shown
8″ (20.3 cm) centers lavatory	K-2098-8	not shown
Single-hole	K-2098-1	not shown

Fixture*:		basin area	water depth
Lavatory		20″ (50.8 cm) x 13″ (33 cm)	3-1/4″ (8.3 cm)
Outlet	1-3/4″ D. (4.4 cm)		
* Approximate measurements for comparison only.			

Holes	**K-2098-4**	**K-2098-8**	**K-2098-1**
Spout	1-1/4″ D. (3.2 cm)	1-3/8″ D. (3.5 cm)	1-3/8″ D. (3.5 cm)
Faucet	1-1/4″ D. (3.2 cm)	1-3/8″ D. (3.5 cm)	

Included Components:	
Cutout template	113500-7

Installation Notes

Install this product according to the installation guide.

NOTICE: Countertop manufacturer or cutter **must** use the cutout template provided with the product, or a current one provided by Kohler Co. (call 1-800-4-KOHLER). Kohler Co. is not responsible for cutout errors when the incorrect cutout template is used.

Fixture dimensions are nominal and conform to tolerances in ASME Standard A112.19.2.

K-2098-4

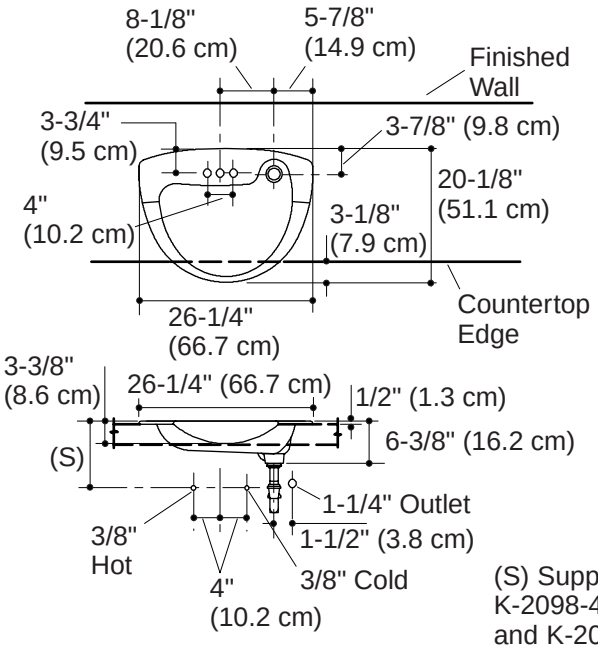

Standard Installation

K-2098-8

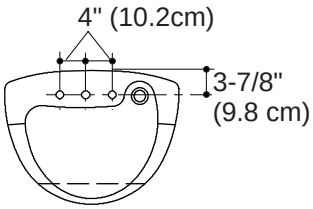

K-2098-1

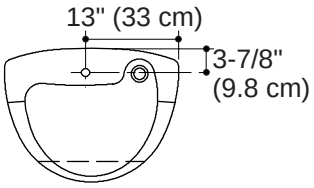

(S) Supply K-2098.-1 & K-2098-4 = 10" (25.4 cm) and K-2098-8 = 14" (35.6 cm)

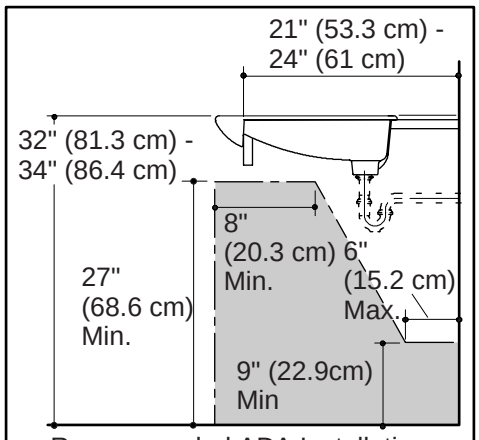

Recommended ADA Installation