KOHLER®

Roughing-In

K-13710

KNEE CONTROL FITTING

Ordering Information

Applicable product:	
Wall-mount knee control fitting	K-13710

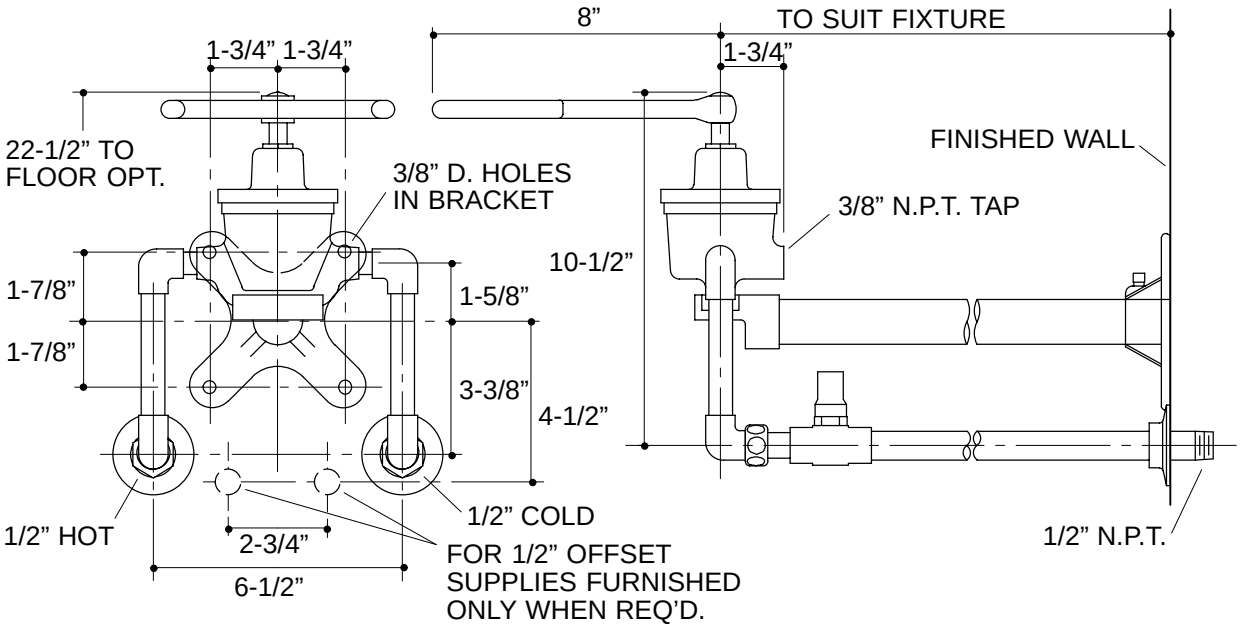

316

NOTES: