ELKAY®
SPECIFICATIONS

Traditional Gourmet
Double Bowl with Ribbed Area
18 Gauge – Type 304 – Self-Rim
Model ILGR4822 Series

GENERAL
Highest quality sink bowls and integral ribbed area seamlessly drawn of #18 gauge, type 304 (18-8) nickel bearing stainless steel. Self-rimming.

DESIGN FEATURES
Bowl Depths: 10" (large bowl), 8" (small bowl).
Bowl and Faucet Deck Recessed: 3/16" drop ledge.
Coved Corners: 1-3/4" radius.
Finish: Exposed surfaces are hand blended to a lustrous highlighted Lustertone® satin finish.
Underside: Fully protected by heavy duty Sound Guard® undercoating to prevent condensation and deaden sound.

OTHER
Drain Opening: 3-1/2".

OPTIONAL ACCESSORIES
Rinsing Baskets: LKRB1614, LKRB1611 and LKERBSS.
Cutting Boards: CB(T)1613 and CB(T)1713.

These sinks comply with ANSI Standard A112.19.3M.

These sinks are listed by the International Association of Plumbing and Mechanical Officials as meeting the requirements of the Uniform Plumbing Code.

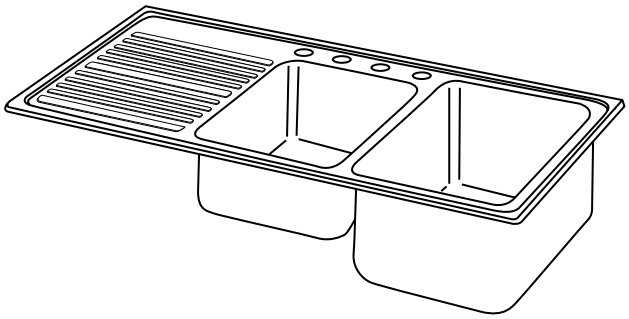

Model ILGR4822R4

SINK DIMENSIONS (INCHES)*

Model Number	Overall		Inside Each Bowl						Ribbed Area Length	Cutout in Countertop (1 1/2" Radius Corners)		No. of 1 1/2" Dia. Faucet Holes 4" Center	Minimum Cabinet Size	Ship. Wt. Lbs.
			Left			Right								
	L	W	L	W	D	L	W	D		L	W			
ILGR4822L	48	22	14	18	10	13 1/2	16	8	17 1/8	47 3/8	21 3/8	1, 2, 3 or 4	51	35
ILGR4822R	48	22	13 1/2	16	8	14	18	10	17 1/8	47 3/8	21 3/8	1, 2, 3 or 4	51	35

*Length is left to right. Width is front to back.

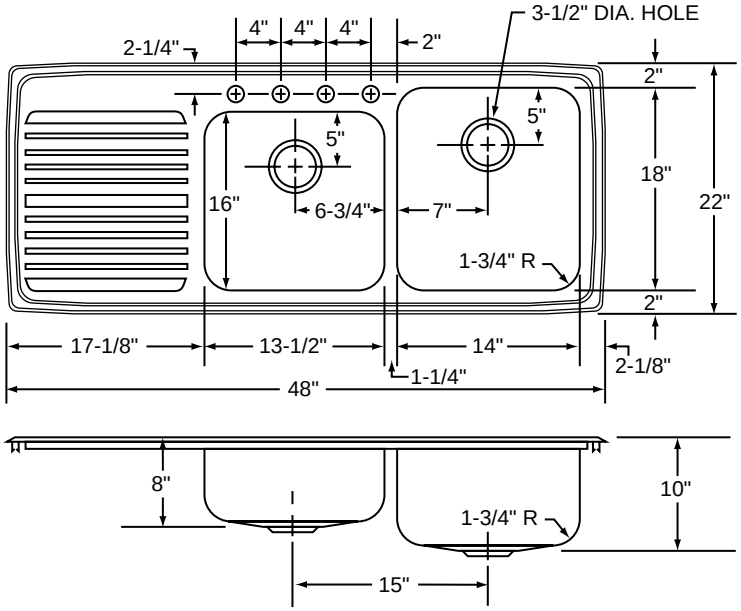

Model ILGR4822R4 Illustrated

ALL DIMENSIONS IN INCHES, TO CONVERT TO MILLIMETERS MULTIPLY BY 25.4.

In keeping with our policy of continuing product improvement, Elkay reserves the right to change product specifications without notice.

This specification describes an Elkay product with design, quality and functional benefits to the user. When making a comparison of other producers' offerings, be certain these features are not overlooked.

Elkay
www.elkayusa.com

2222 Camden Court
Oak Brook, IL 60523

Printed in U.S.A.
©2003 Elkay