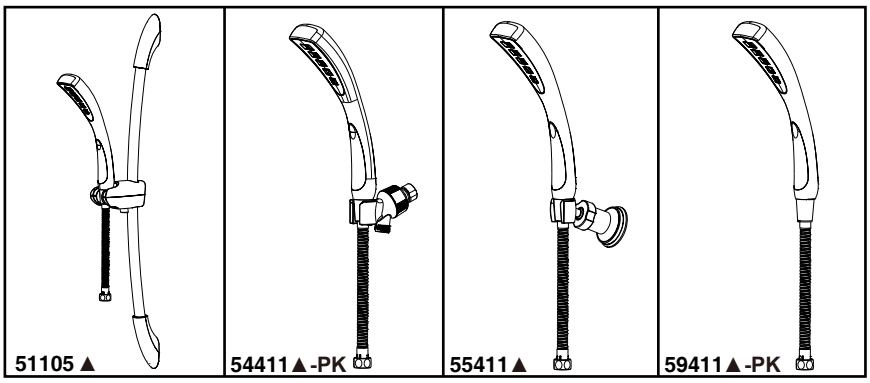

Submitted Model No.:_____

Specific Features:_____

HANDSHOWER

- H_2Okinetic Technology® Handshower
- 24" Wall Bar, Wall mount or Shower Arm Mount
- Certified Dual Check Valves

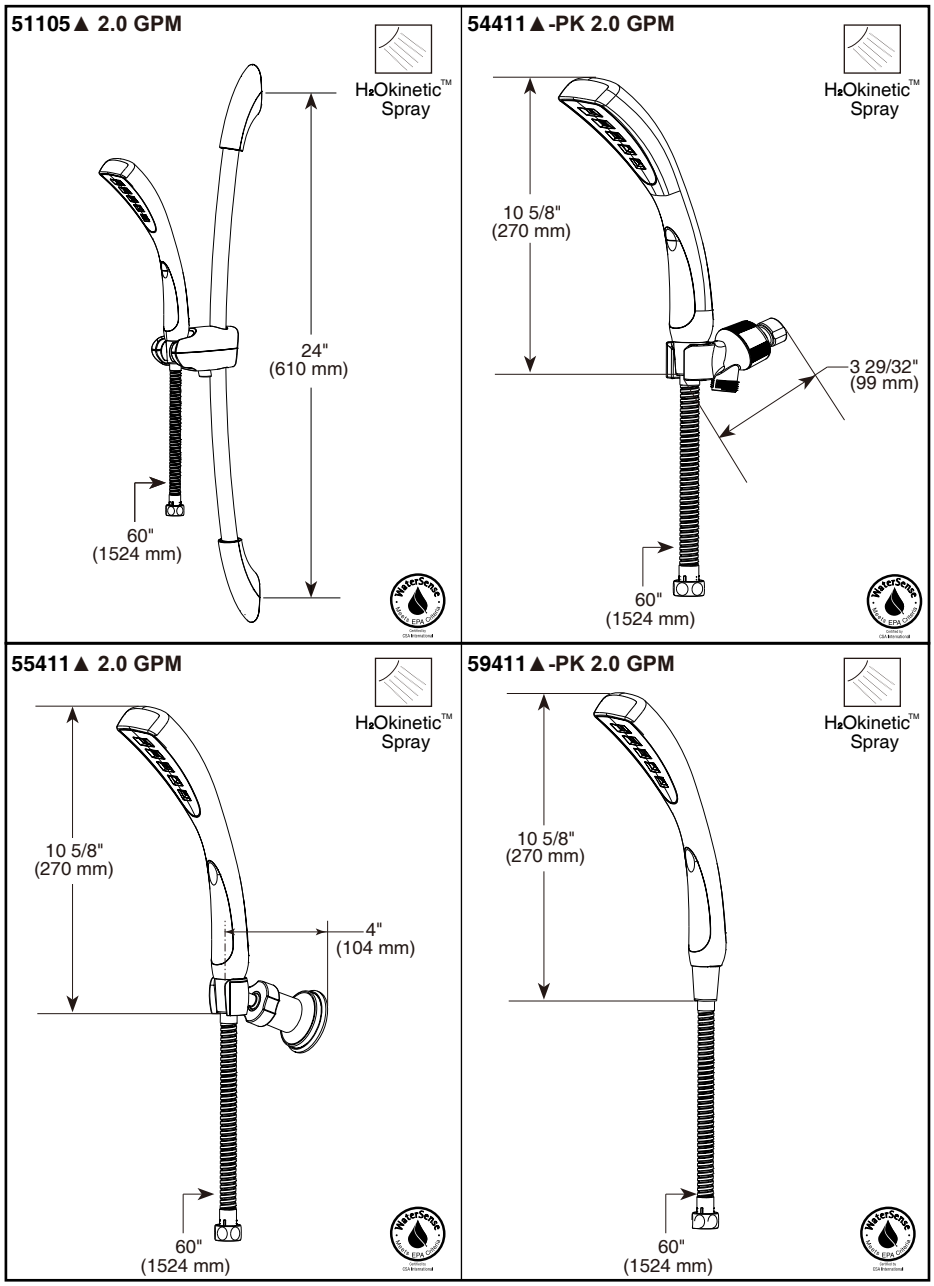

▲Designate proper finish suffix

STANDARD SPECIFICATIONS:

- ABS hand held shower with one setting.
- Adjustable shower arm mount for hands-free showering.
- Wall bar with adjustable height handshower mount.
- 60"(1524mm) metal stretchable hose.
- Maximum water consumption 2.0 gpm & (7.6 L/min) @ 80 psi.
- Actual water consumption 1.8gpm & (6.8 L/min) @ 45 psi.
- For use with automatic compensating valves rated at 1.75 gpm (6.6 L/min) or less.

WARRANTY

- Lifetime limited warranty on parts (other than electronic parts and batteries) and finishes; or, for commercial users, for 5 years from the date of purchase.
- 5 year limited warranty on electronic parts (other than batteries); or for commercial users, for 1 year from the date of purchase. No warranty is provided on batteries

COMPLIES WITH

- ASME A112.18.1/CSA B125.1
- EPA WaterSense®

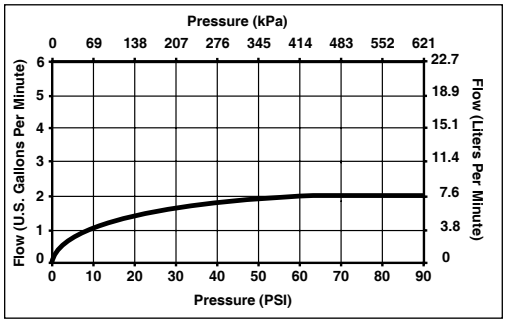

DELTA FAUCET COMPANY
55 E. 111th Street, Indianapolis, Indiana 46280
350 South Edgeware Road, St. Thomas, Ontario Canada N5P 4L1
© 2012 Masco Corporation of Indiana

Delta reserves the right (1) to make changes in specifications and materials, and (2) to change or discontinue models, both without notice or obligation. Dimensions are for reference only. See current full-line price book or www.specselect.com for finish options and product availability.

DSP-B-51105 Rev.A