Danze®

SPECIFICATIONS

SINGLE HANDLE DECK MOUNT POT FILLER

Description

- Add cold water to pots on the stove
- Install on countertop, ideal of cooking island
- 21" articulated spout folds out of the way when not in use
- Ceramic disc shut off and over pot valves
- Spout height 10" above counter; 3" height extension included for special requirement

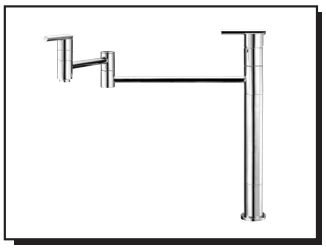

D206058
PARMA™

Available Colors & Finish
- Chrome
- Stainless Steel (SS)

Flow & Valving

- See Chart

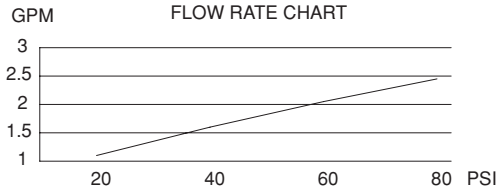

Standards

- ASME A112.18.1
- CSA B125
- NSF 61-9
- Listed IAPMO/UPC
- Energy policy act of 1992
- ADA Accessibility Guidelines for Buildings and Facilities - 4.27.4 Controls and Mechanisms

Warranty

Danze products are covered by a manufacturer's limited "lifetime" warranty for manufacturing defects.

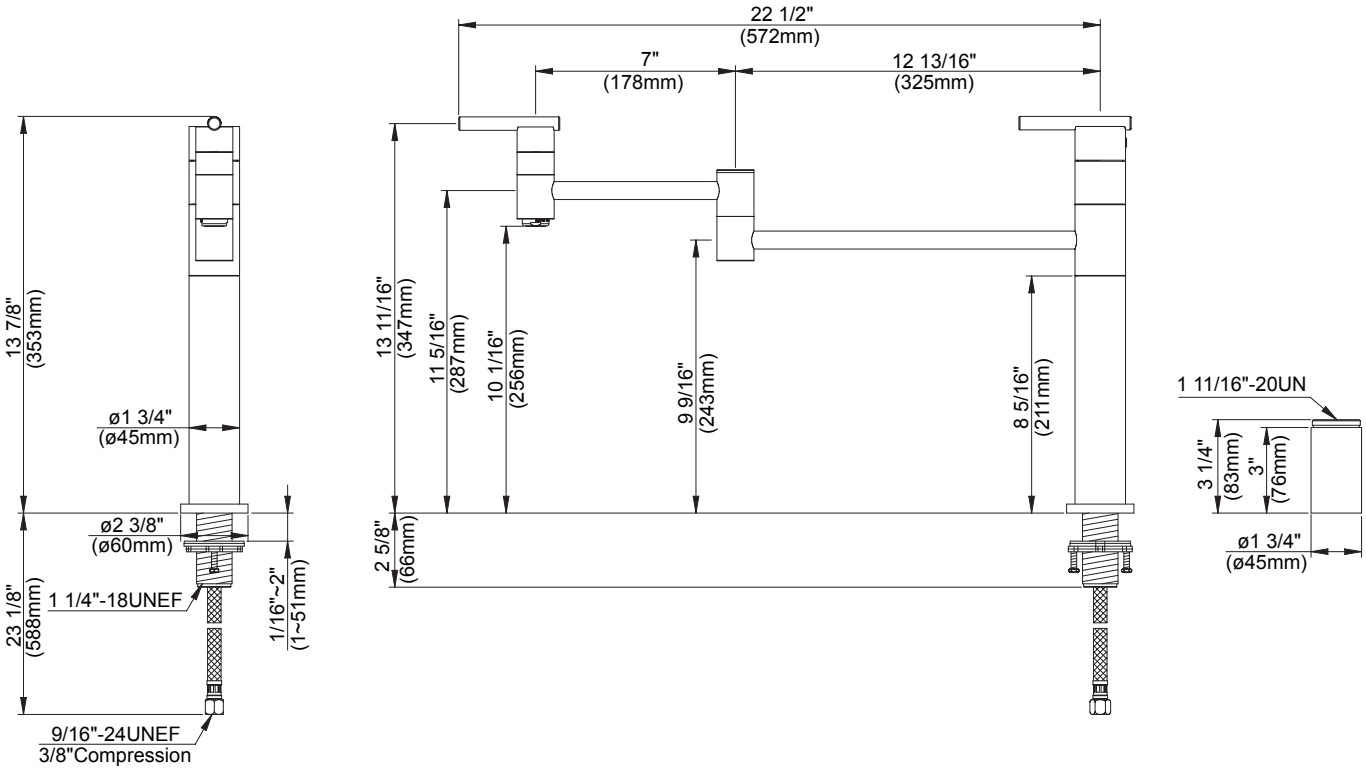

Specific Features: _____ *Submitted Model No.:* _____

SD206058/04-07.02

Danze, Inc., 2500 Internationale Parkway, Woodridge, IL 60517, USA WWW.DANZE.COM