Danze®

SPECIFICATIONS

SINGLE HANDLE WALL MOUNT POT FILLER

Description

- 2-piece articulated spout folds out of the way when not in use
- Extends up to 22" from wall
- Ceramic disc valve at wall and over pot

Flow & Valving

- See Chart

Standards

- ASME A112.18.1
- CSA B125
- NSF 61-9
- Energy policy act of 1992
- Listed IAPMO/UPC
- ADA Accessibility Guidelines for Buildings and Facilities - 4.27.4 Controls and Mechanisms

Warranty

Danze products are covered by a manufacturer's limited "lifetime" warranty for manufacturing defects.

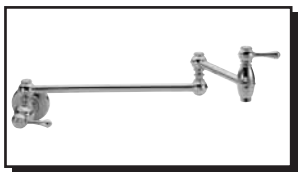

D205557
OPULENCE™

Available Colors & Finish

- Chrome
- Antique Copper (AC)
- Satin Black (BS)
- Polished Brass (PBV)
- Oil Rub Bronze (RB)
- Stainless Steel (SS)

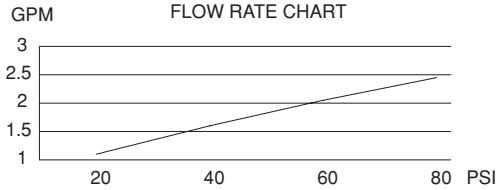

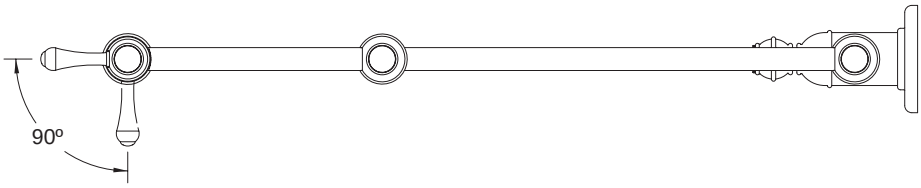

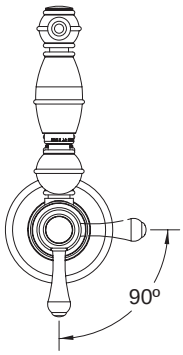

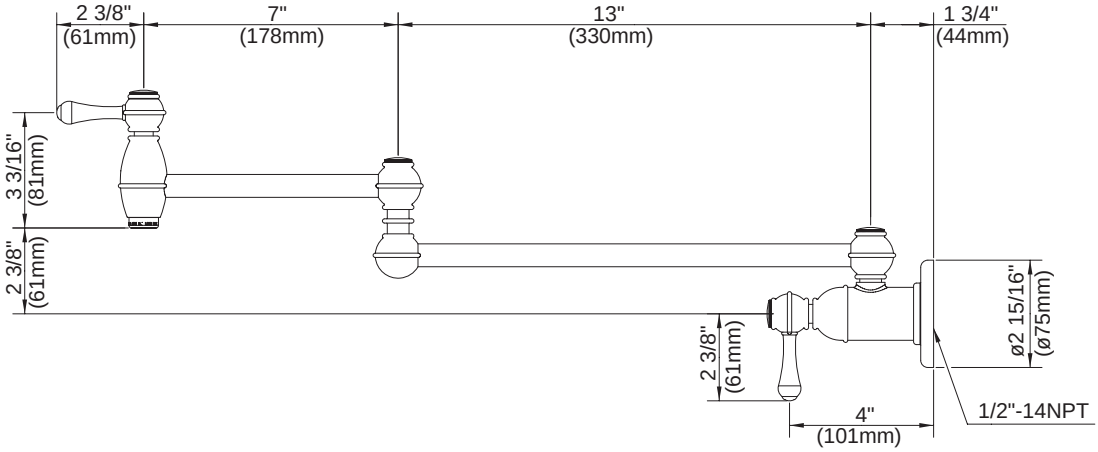

Specific Features: _____ *Submitted Model No.:* _____

Danze, Inc., 2500 Internationale Parkway, Woodridge, IL 60517, USA WWW.DANZE.COM