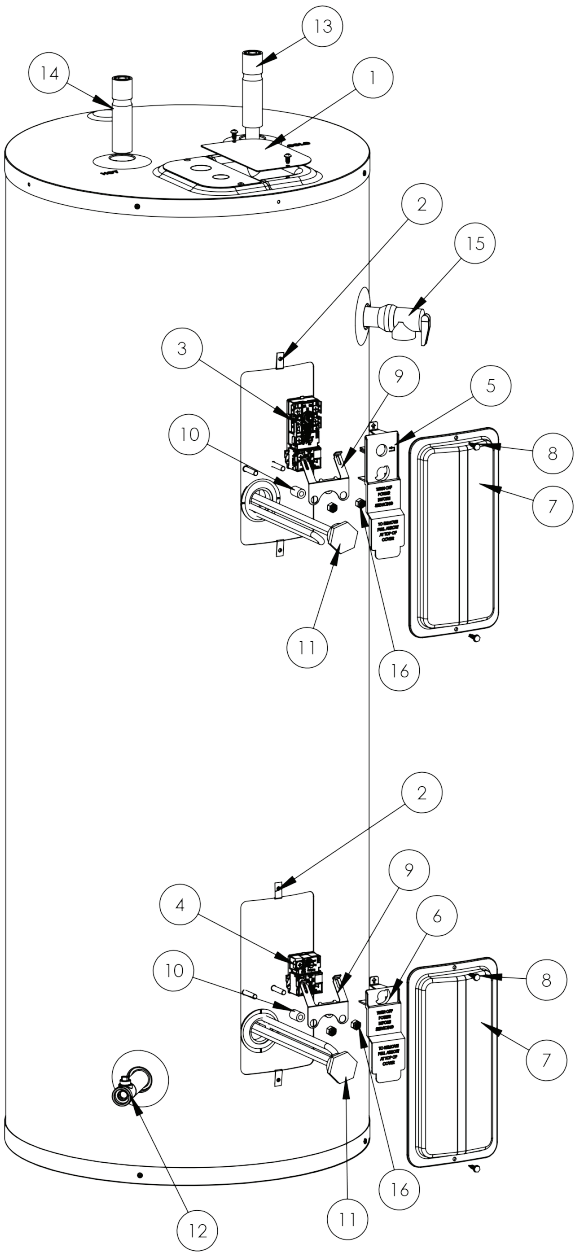

ITEM #	DESCRIPTION	PART #
1	JUNCTION BOX COVER (w/SCREWS)	6060P-983
2	CLIP-ON NUT	7450P-016
3	THERMOSTAT - UPPER	6060P-1008
	THERMOSTAT - UPPER ("U" MODELS ONLY)	6060P-001
4	THERMOSTAT LOWER ("U" MODELS ONLY)	6060P-002
5	THERMOSTAT PROTECTIVE COVER	6060P-994
6	THERMOSTAT PROTECTIVE COVER	6060P-952
7	ACCESS PANEL	6060P-187
8	SCREWS - ACCESS PANEL	6075P-006
9	MOUNTING CLIP	6060P-633
10	SPACER	6060P-979
11	ELECTRIC ELEMENT - 3000W	6060P-939
	ELECTRIC ELEMENT - 4500W	6060P-938
	ELECTRIC ELEMENT - 5500W	6060P-937
12	DRAIN VALVE	6060P-009
13	DIP TUBE	6060P-1035
14	NIPPLE/HEAT TRAP	6060P-1038
15	TEMP/PRESSURE RELIEF VALVE	TP1500
16	NUTS	6060P-935

WHL-026-A
08/07/15

Figure 8 - Replacement Parts - Staged Operation