KOHLER GENUINE PARTS

Mastershower®

volume control valve trim

K-T10184-7-CP

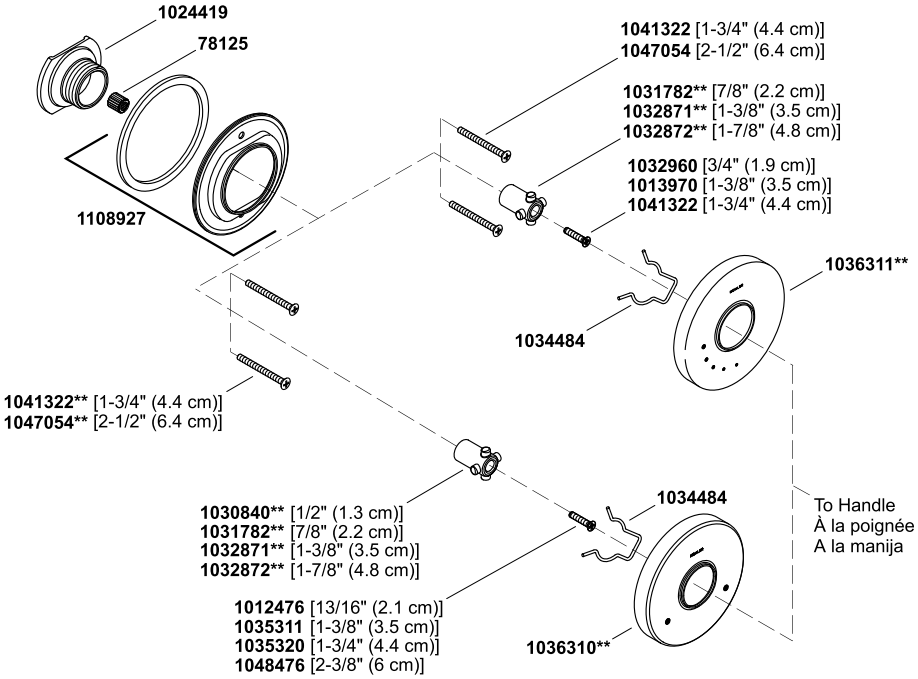

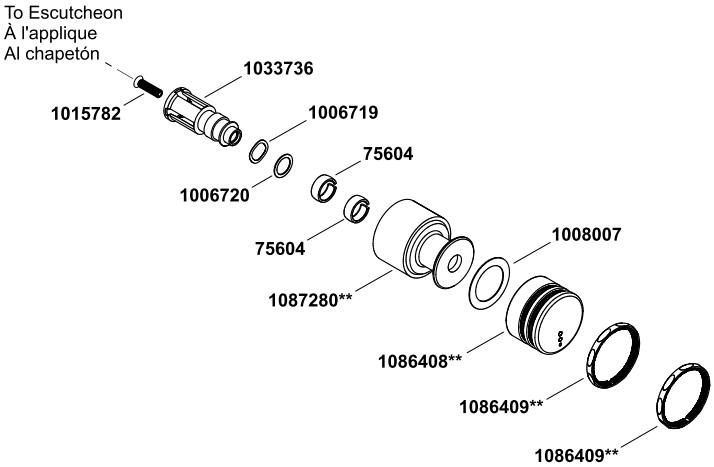

1115035-8- **E**

© 2013 Kohler Co.