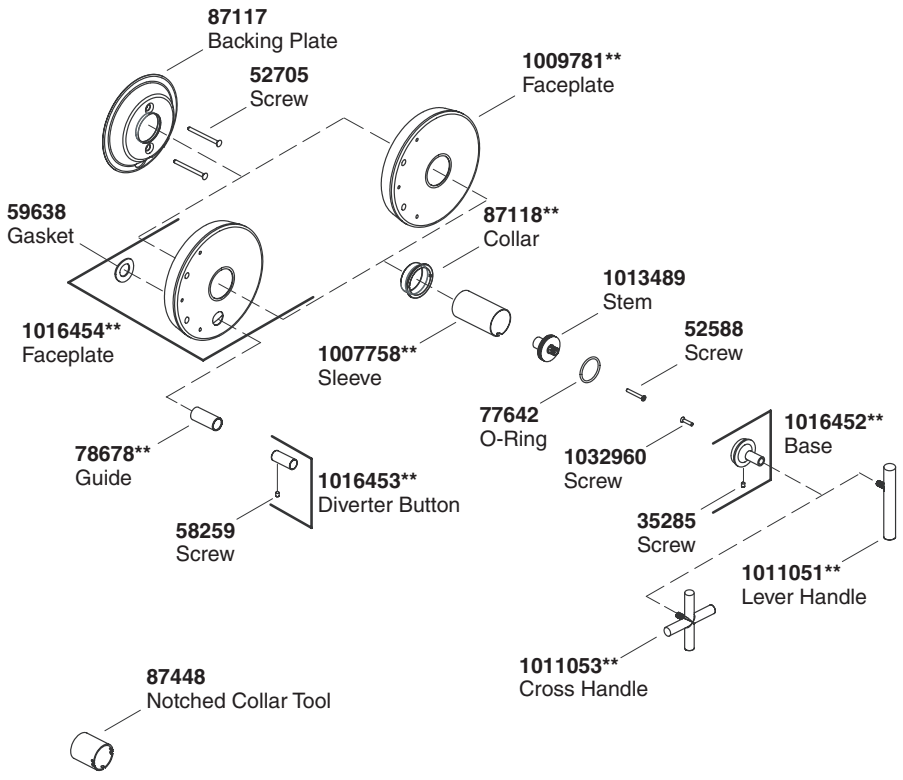

****Finish/color code must be specified when ordering.**

Service Parts

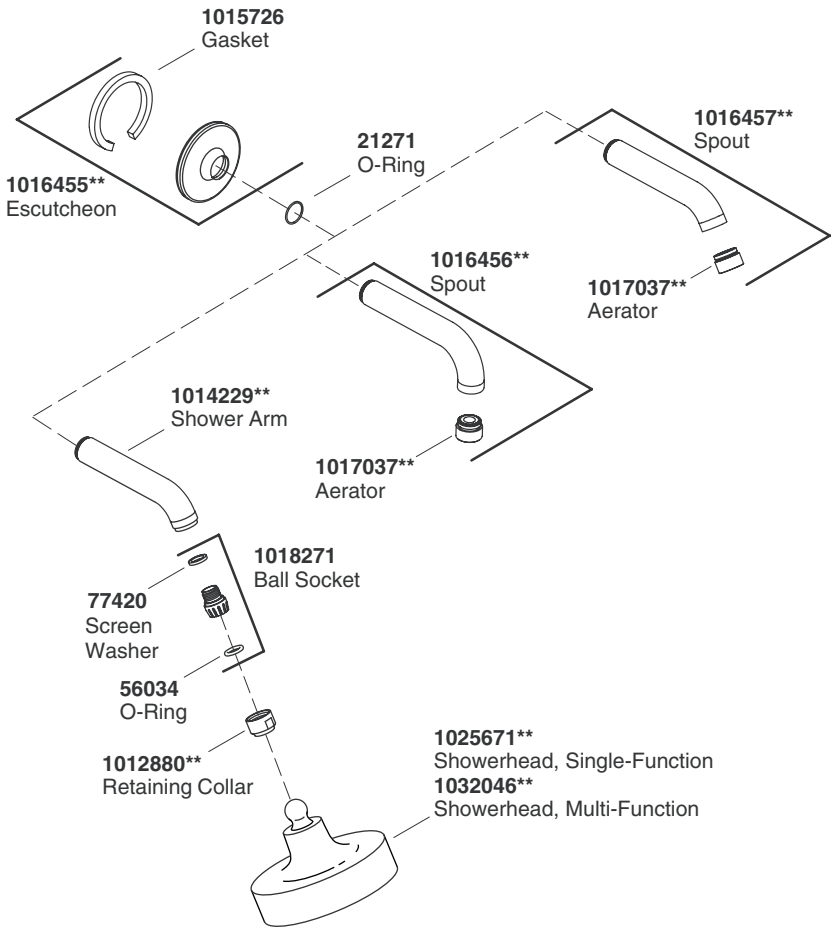

****Finish/color code must be specified when ordering.**