ELKAY®

REPLACEMENT PARTS

Single Handle Hospitality Faucet
Models LKD20858C, LKD20858LC, LKD208513C, LKD208513LC, LKDVR208513C, and LKDVR208513LC

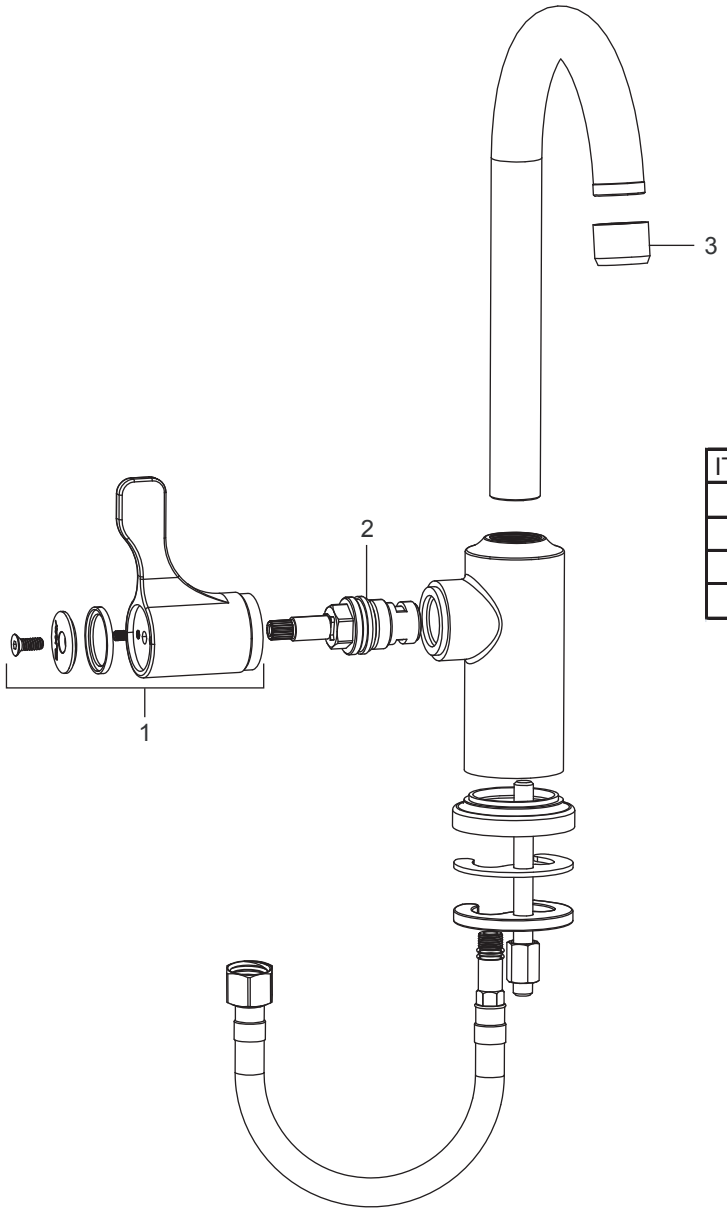

ITEM	PART #	DESCRIPTION
1	0000000680	2.6” Blade Handle
2	0000000682	Cartridges
3	0000000688	Aerator
3	0000000687	VR Model Aerator

Elkay
elkay.com

2222 Camden Court, Oak Brook, IL 60523
1-630-574-8484 Fax: 1-630-574-4509

©2013 Elkay