1/4" FRAMELESS DOOR PARTS
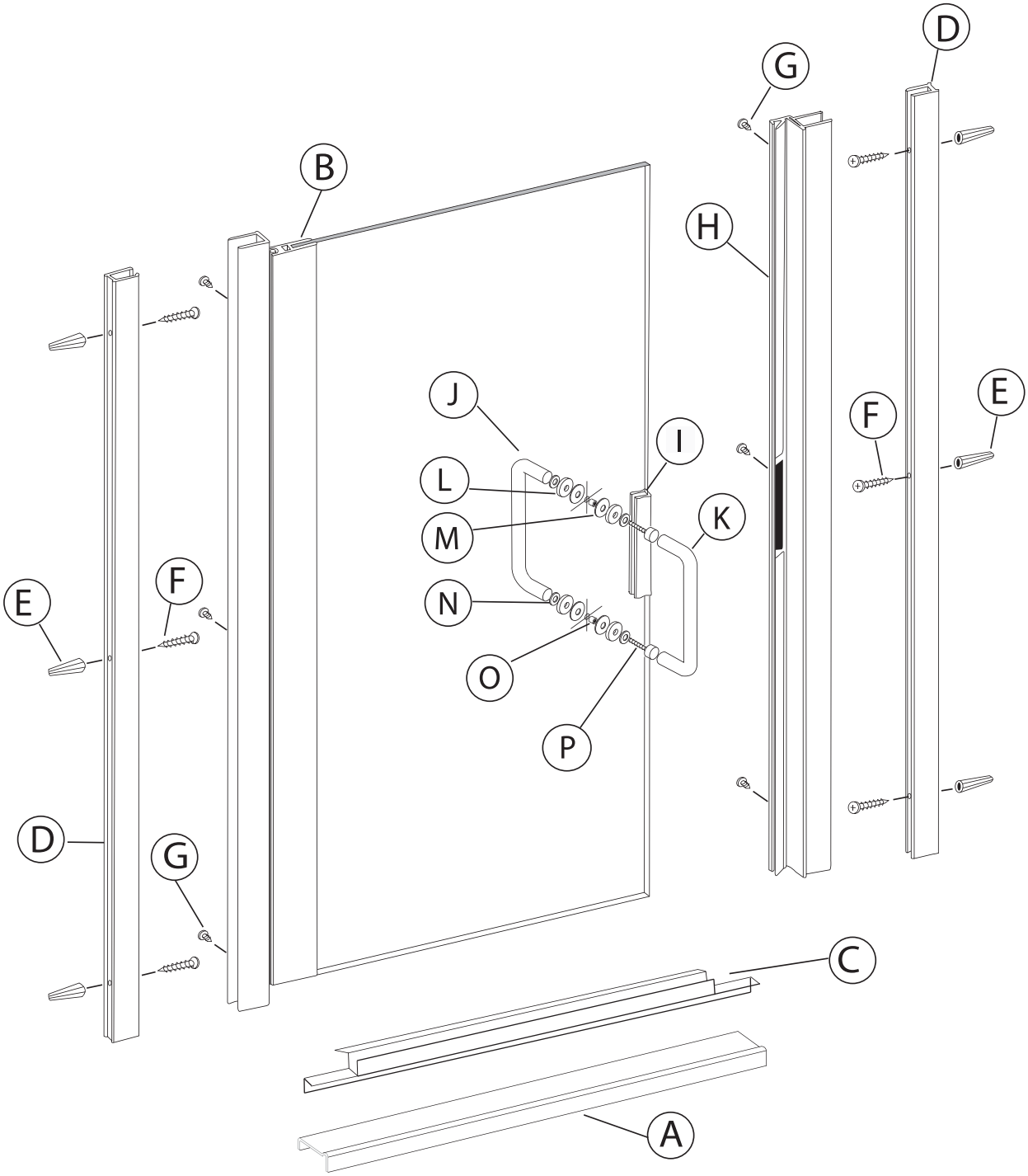
A. Shower Curb (1)
B. Glazed Door Panel Assembly (1)
C. Clear Bottom Sweep (1)
D. Wall Jambs (2)
E. Plastic Wall Anchors (6)
F. #8 x 1 1/2" Truss Head Screws (6)
G. #6 x 3/8" Tech Screws (self-tapping) (6)
H. Strike Jamb w/ Magnet & Vinyl (1)
I. Latch w/ Strike Plate & Vinyl (1)
J - P. Handle Assembly (1)
(see supplement Pg. 9 or Pg.10)