REPAIR PARTS

CLT(24 - 60) -1B Condensing Units Gray Painted Units

CLT24-1B
CLT30-1B
CLT36-1B
CLT42-1B
CLT48-1B
CLT60-1B

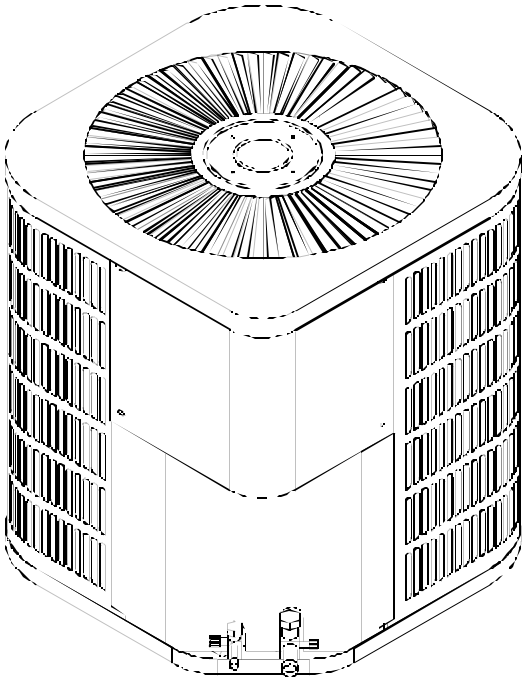

RP - 261
August 2004

Made in the USA by:
Goodman Manufacturing Company, L.P.
2550 North Loop West, Suite 400
Houston Texas 77092

This manual is to be used by qualified technicians only.

Copyright © 2004 Goodman Manufacturing Company, L.P.

Important Information

Goodman Manufacturing Company, L.P. is not responsible for personal injury or property damage resulting from improper service. Review all service information before beginning repairs.

Warranty service must be performed by an authorized technician, using authorized factory parts. If service is required after the warranty expires, Goodman Manufacturing Company, L.P. also recommends contacting an authorized technician and using authorized factory parts.

For assistance within the U.S.A. contact:

Consumer Affairs Department
Goodman Manufacturing Company, L.P.
7401 Security Way
Houston, Texas 77040
877-254-4729-Telephone
713-863-2382-Facsimile

For assistance outside the U.S.A. contact:

International Division
Goodman Manufacturing Company, L.P.
7401 Security Way
Houston, Texas 77040
713-861-2500-Telephone
713-863-2382-Facsimile

Index

Functional Parts List 5

Illustration and Parts ..... 6 - 9

Views shown are for parts illustrations only, not servicing procedures.

Text Codes:

AR - As Required
NA - Not Available
NS - Not Shown
00000000 - See Note
QTY - Quantity Example (QTY 3) (If Quantity not shown, Quantity = 1)
M - Model Example (M1) (If M Code not shown, then part is used on all Models)

Expanded Model Nomenclature:

Example
M1 - Model#1
M2 - Model#2
M3 - Model#3

This page left blank intentionally.

Functional Parts

Part No:	Description:
B94575300	CAPACITOR, DUAL-SECTION, 35/5/370 (M1, M2)
B94577200	CAPACITOR, DUAL-SECTION, 45/5/370 (M3)
B94577400	CAPACITOR, DUAL-SECTION, 50/5/370 (M4)
B94575900	CAPACITOR, DUAL-SECTION, 55/5/370 (M5)
B94578800	CAPACITOR, DUAL-SECTION, 60/5/440 (M6)
ZR18K4PFV930	COMPRESSOR, ZR18K4-PFV-230 (M1)
ZR24K4PFV930	COMPRESSOR, ZR24K4-PFV-230 (M2)
ZR32K3PFV930	COMPRESSOR, ZR32K3-PFV-230 (M3)
ZR36K3PFV930	COMPRESSOR, ZR36K3-PFV-230 (M4)
ZR40K3PFV930	COMPRESSOR, ZR40K3-PFV-230 (M5)
ZR48K3PFV935	COMPRESSOR, ZR48K3-PFV-235 (M6)
12621-09	CRATED COND. SERVICE COIL W/DRIER (M2)
12621-10	CRATED COND. SERVICE COIL W/DRIER (M3)
12621-11	CRATED COND. SERVICE COIL W/DRIER (M4)
12621-12	CRATED COND. SERVICE COIL W/DRIER (M5, M6)
12621-07	CRATED COND. SERVICE COIL W/DRIER (M1)
B13400270	FAN MOTOR, 208/230-60-1, 1 SPD, 830 RPM, 1/4 HP (M3, M4, M5, M6)
B13400348	FAN MOTOR, 208/230-60-1, 1 SPD, 830 RPM, 1/6 HP (M1, M2)
B1086764	FAN, 4 BLADE, 22°P, 22" DIA. (M1, M2)
B1086765	FAN, 4 BLADE, 28°P, 22" DIA. (M3, M4, M5, M6)
B1219212	FILTER DRIER (M1, M2, M3, M4)
B1219225	FILTER DRIER (M5, M6)

SPECIAL PARTS

IO-101	INSTALLATION AND OPERATING MANUAL
RP-261	MANUAL, REPAIR PARTS
PW-302A	PRODUCT WARRANTY
SS-338	SPECIFICATION SHEET
B260S8292	SPRAY PAINT, ARCHITECTURAL GRAY

Expanded Model Nomenclature

M1 - CLT24-1B
M2 - CLT30-1B
M3 - CLT36-1B
M4 - CLT42-1B
M5 - CLT48-1B
M6 - CLT60-1B

Chassis

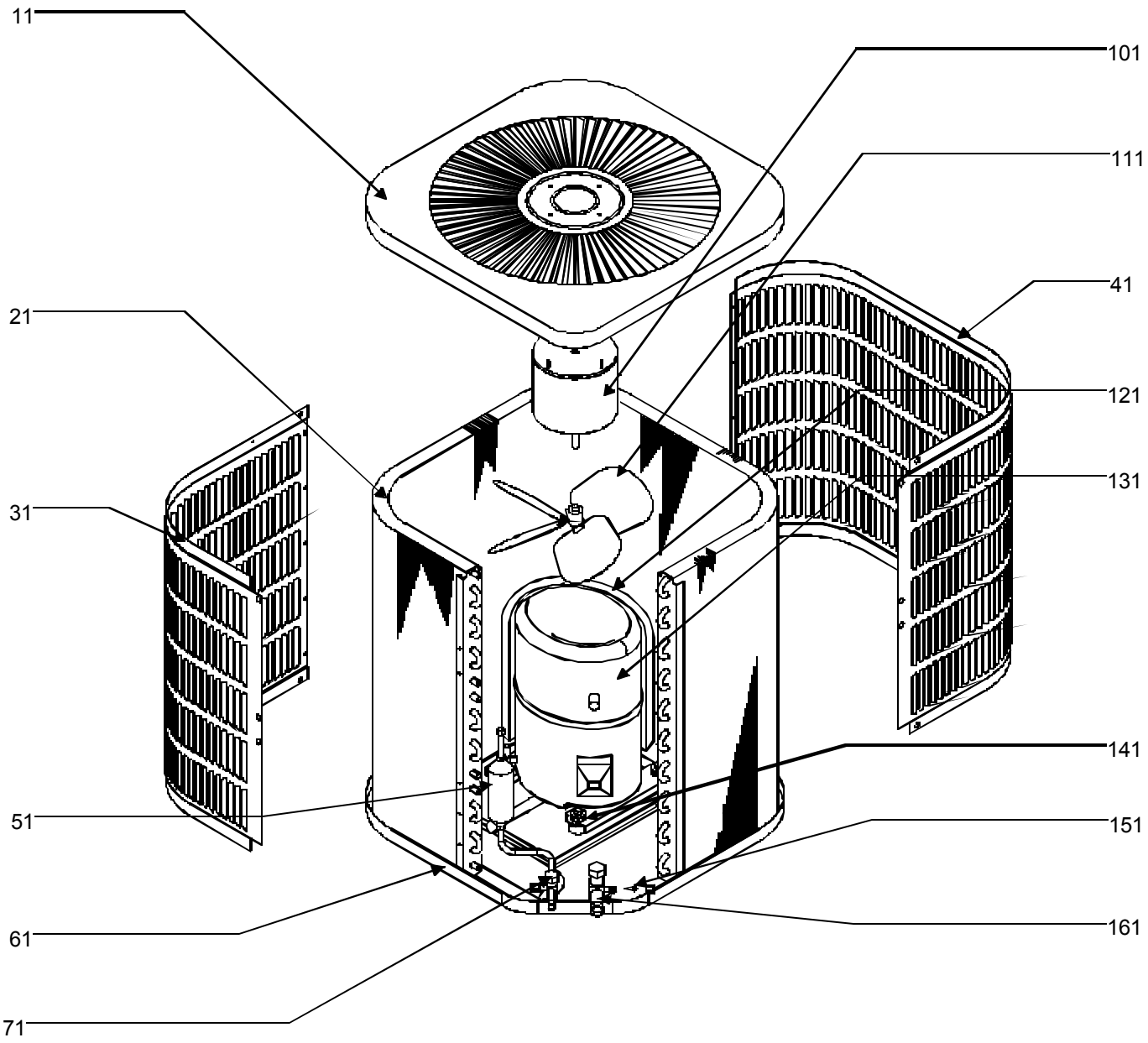

Chassis

Ref. No:	Part No:	Description:
Image 1:		
11	1779412PDG	TOP PANEL
21	12621-07	CRATED COND. SERVICE COIL W/DRIER (M1)
21	12621-09	CRATED COND. SERVICE COIL W/DRIER (M2)
21	12621-10	CRATED COND. SERVICE COIL W/DRIER (M3)
21	12621-11	CRATED COND. SERVICE COIL W/DRIER (M4)
21	12621-12	CRATED COND. SERVICE COIL W/DRIER (M5, M6)
31	1259560PDG	LOUVERED PANEL, 25.0" HAIRPIN SIDE (M1)
31	1259568PDG	LOUVERED PANEL, 27.5" HAIRPIN SIDE (M2)
31	1259561PDG	LOUVERED PANEL, 30.0" HAIRPIN SIDE (M3)
31	1259562PDG	LOUVERED PANEL, 37.5" HAIRPIN SIDE (M4)
31	1259563PDG	LOUVERED PANEL, 40.0" HAIRPIN SIDE (M5, M6)
41	1259564PDG	LOUVERED PANEL, 25.0" RETURN SIDE (M1)
41	1259571PDG	LOUVERED PANEL, 27.5" RETURN SIDE (M2)
41	1259565PDG	LOUVERED PANEL, 30.0" RETURN SIDE (M3)
41	1259566PDG	LOUVERED PANEL, 37.5" RETURN SIDE (M4)
41	1259567PDG	LOUVERED PANEL, 40.0" RETURN SIDE (M5, M6)
51	B1219212	FILTER DRIER (M1, M2, M3, M4)
51	B1219225	FILTER DRIER (M5, M6)
61	1787212PDG	BOTTOM PAN, LARGE
71	B12825171	BASE VALVE, LIQUID LINE 3/8" X 5/16"
101	B13400270	FAN MOTOR, 208/230-60-1, 1 SPD, 830 RPM, 1/4 HP (M3, M4, M5, M6)
101	B13400348	FAN MOTOR, 208/230-60-1, 1 SPD, 830 RPM, 1/6 HP (M1, M2)
111	B1086764	FAN, 4 BLADE, 22°P, 22" DIA. (M1, M2)
111	B1086765	FAN, 4 BLADE, 28°P, 22" DIA. (M3, M4, M5, M6)
121	B1488807	COMPRESSOR SOUND BLANKET (M3, M4)
121	B1488810	COMPRESSOR SOUND BLANKET (M1, M2)
121	B1488811	COMPRESSOR SOUND BLANKET (M5, M6)
131	ZR18K4PFV930	COMPRESSOR, ZR18K4-PFV-230 (M1)
131	ZR24K4PFV930	COMPRESSOR, ZR24K4-PFV-230 (M2)
131	ZR32K3PFV930	COMPRESSOR, ZR32K3-PFV-230 (M3)
131	ZR36K3PFV930	COMPRESSOR, ZR36K3-PFV-230 (M4)
131	ZR40K3PFV930	COMPRESSOR, ZR40K3-PFV-230 (M5)
131	ZR48K3PFV935	COMPRESSOR, ZR48K3-PFV-235 (M6)
141	B1339533	GROMMET, COMPRESSOR
151	B1787000	CORE, VALVE
161	B12825166	BASE VALVE, SUCTION LINE, 3/4" X 3/4" (M1, M2, M3)
161	B12825167	BASE VALVE, SUCTION LINE, 7/8" X 3/4" (M4, M5, M6)
NS	B1393736	BOLT, COMPRESSOR
NS	B13776923	FAN GRILL GUARD, LARGE

Expanded Model Nomenclature

M1 - CLT24-1B
M2 - CLT30-1B
M3 - CLT36-1B
M4 - CLT42-1B
M5 - CLT48-1B
M6 - CLT60-1B

Control Panel

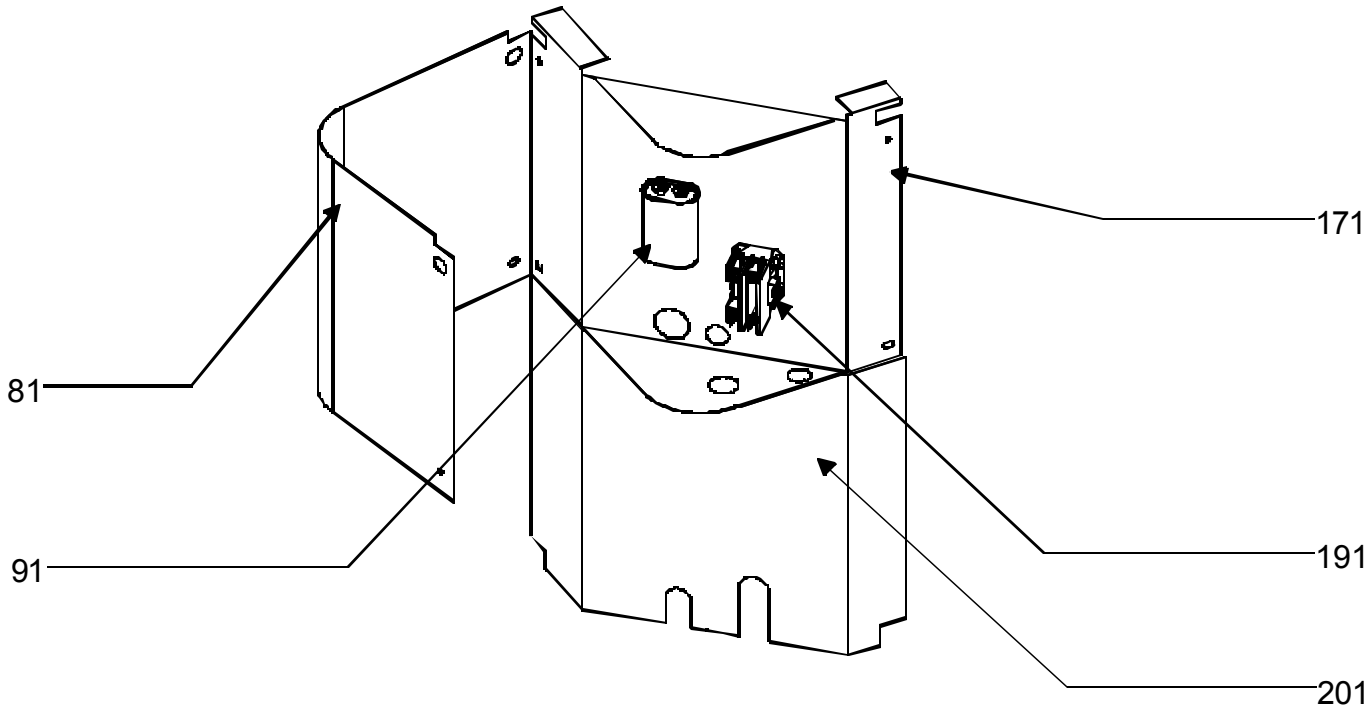

Control Panel

Ref. No:	Part No:	Description:
Image 1:		
81	1787624PDG	CONTROL BOX COVER
91	B94575300	CAPACITOR, DUAL-SECTION, 35/5/370 (M1, M2)
91	B94577200	CAPACITOR, DUAL-SECTION, 45/5/370 (M3)
91	B94577400	CAPACITOR, DUAL-SECTION, 50/5/370 (M4)
91	B94575900	CAPACITOR, DUAL-SECTION, 55/5/370 (M5)
91	B94578800	CAPACITOR, DUAL-SECTION, 60/5/440 (M6)
171	1787623	CONTROL BOX
191	B1360321	CONTACTOR, 25 AMP, 1 POLE (M1, M2, M3, M4)
191	B1360324	CONTACTOR, 30 AMP, 1 POLE (M5)
191	B1360305	CONTACTOR, 40 AMP, 1 POLE (M6)
201	1787707P	ACCESS PANEL, 25.0" UNIT (M1)
201	1787708P	ACCESS PANEL, 28.0" UNIT (M2)
201	1778709P	ACCESS PANEL, 30.0" UNIT (M3)
201	1778717P	ACCESS PANEL, 37.5" UNIT (M4)
201	1787718P	ACCESS PANEL, 40.0" UNIT (M5, M6)
NS	1284835	CAPACITOR STRAP
NS	B260S8292	SPRAY PAINT, ARCHITECTURAL GRAY

Expanded Model Nomenclature

M1 - CLT24-1B
M2 - CLT30-1B
M3 - CLT36-1B
M4 - CLT42-1B
M5 - CLT48-1B
M6 - CLT60-1B