POWER VENTED GAS WATER HEATER

A Spanish language version of these instructions is available by contacting the company listed on the rating plate.
La version espanola de estas instrucciones se puede obtener al escribirle a la fabrica cuyo nombre aparece en la placa de especificaciones.

INSTALLATION AND OPERATING INSTRUCTION MANUAL

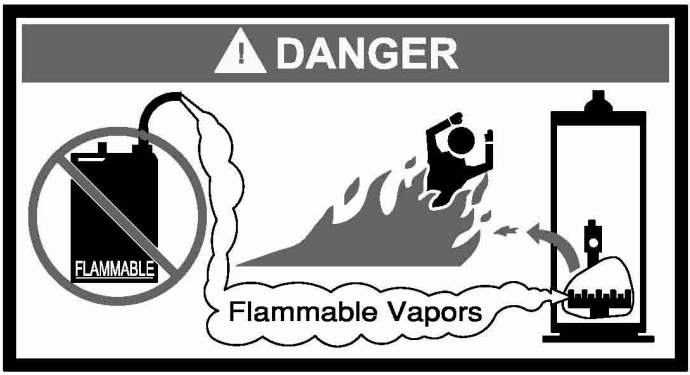

WARNING: If the information in these instructions is not followed exactly, a fire or explosion may result causing property damage, personal injury, or death.

FOR YOUR SAFETY

- **Do not store or use gasoline or other flammable, combustible, or corrosive vapors and liquids in the vicinity of this or any other appliance.**

- **WHAT TO DO IF YOU SMELL GAS**
  - **Do not try to light any appliance.**
  - **Do not touch any electrical switch; do not use any phone in your building.**
  - **Immediately call your gas supplier from a neighbor's phone. Follow the gas supplier's instructions.**
  - **If you cannot reach your gas supplier, call the fire department.**
- **Installation and service must be performed by a qualified installer, service agency or the gas supplier.**

For your family's comfort, safety and convenience we recommend this water heater be installed and serviced by a plumbing professional.

238-45637-00G REV 05/09

CONGRATULATIONS!

You have just purchased one of the finest water heaters on the market today!

This installation, operation and instruction manual will explain in detail the installation and maintenance of your new Power Vented Gas Water Heater. We strongly recommend that you contact a plumbing professional for the installation of this water heater.

We require that you carefully read this manual, as well as the enclosed warranty, and refer to it when questions arise. If you have any specific questions concerning your warranty, please consult the plumbing professional from whom your water heater was purchased. For your records we recommend that you write the model, serial number and installation date of your water heater in the maintenance section in the back of this manual.

This manual should be kept with the water heater.

Special Flammable Vapor Ignition Resistant System:

This water heater is equipped with a Flammable Vapor Ignition Resistant System. In the event of improper usage or storage of gasoline or other flammable materials in the location where the water heater is installed, the technology will resist ignition of the flammable vapors outside the confines of the water heater.

The Flammable Vapor Ignition Resistant System features:

- Advanced Flame Arrestor Design.
- Flammable Vapor Sensor.
- Automatic Ignition Device.
- Sight Window to observe operation of pilot and burner.

FOR YOUR SAFETY: Activation of the Flammable Vapor Ignition Resistant System occurs when flammable vapors are drawn into the water heater and are combusted. If flammable vapors are detected and/or sensed:

- Do not try to light any appliance.
- Do not touch any electrical switch; Do not use any phone in your building.
- Leave the premises and immediately call the fire department from a neighbor's phone. Follow the fire department's instructions.

Once the flammable vapor has been evacuated, contact your plumbing professional or the manufacturer for further instructions. Replacement of a Flammable Vapor Ignition Resistant System equipped water heater due to a flammable vapor shutdown is not covered under the terms of the limited warranty.

TABLE OF CONTENTS

	page
GENERAL INFORMATION	4
INSTALLATION.	5
Locating The Water Heater	5
Minimum Clearances	8
Venting	8
Specifications for 48 Gal (181.6 L) 65 Gal (246.0 L)	11
Specifications for 40 Gal (151.4 L) 50 Gal (189.2 L) 60 Gal (227.1 L)	17
Vent Pipe Preparation and Joining	23
Combustion Air Supply	25
Water Connections	27
Gas Connections	30
Electrical Connections	31
Wiring Diagram	32
GENERAL OPERATION	33
Lighting and Shutdown Instructions	34
Thermostat Adjustment	35
Burner Flame Check	36
MAINTENANCE	37
TROUBLESHOOTING	41
PARTS LIST DRAWING	43
PARTS LIST	43
INSTALLATION INSTRUCTIONS FOR POTABLE WATER AND SPACE HEATING	44

GENERAL INFORMATION

This gas-fired water heater's design is certified by CSA International under the *American National Standard Z21.10.1* and *CSA 4.1-M*, most current editions at the time of manufacture.

This water heater must be installed in accordance with local codes or, in the absence of local codes, the *National Fuel Gas Code, ANSI Z223.1*-Latest Edition) and/or in Canada *CAN/CGA B149 Installation Codes* (Latest Editions). The warranty for this water heater is in effect only when the water heater is installed, adjusted, and operated in accordance with these Installation and Operating Instructions. The manufacturer will not be held liable for any damage resulting from alteration and/or failure to comply with these instructions.

This water heater is not design certified for installation in a mobile home. Such an installation may create a hazardous condition and will nullify the warranty.

⚠ CAUTION

Incorrect operation of this appliance may create a hazard to life and property and will nullify the warranty.

Do not use this appliance if any external part to the tank has been submerged in water. You should contact a qualified service technician to inspect the appliance and to replace any part of the control system including the combination gas control which has been submerged in water.

⚠ DANGER

Do not store or use gasoline or other flammable, combustible, or corrosive vapors and liquids in the vicinity of this or any other appliance.

IMPORTANT

Before proceeding, please inspect the water heater and its components for possible damage. **DO NOT** install any water heater with damaged components. If damage is evident then please contact the supplier where the water heater was purchased or the manufacturer listed on the rating plate for replacement parts.

Make sure that you check the rating plate and combination gas control on the water heater to be certain that the type of gas being supplied corresponds with the marking on the rating plate and combination gas control.

A sacrificial anode is used to extend tank life. The removal of this anode, for any reason, will nullify the warranty. In areas where water is unusually active, an odor may occur at the hot water faucet due to a reaction between the sacrificial anode and the impurities in the water. If this should happen, an alternative anode may be purchased from the supplier that installed this water heater. This will minimize the odor while protecting the tank. Additionally, the water heater should be flushed with appropriate dissolvers to eliminate any bacteria.

INSTALLATION

Locating The Water Heater

⚠ WARNING

Water heaters are heat producing appliances. To avoid damage or injury, do not store materials against the water heater or vent-air intake system. Use proper care to avoid unnecessary contact (especially by children) with the water heater and vent-air intake components. **UNDER NO CIRCUMSTANCES MUST FLAMMABLE MATERIALS, SUCH AS GASOLINE OR PAINT THINNER BE USED OR STORED IN THE VICINITY OF THIS WATER HEATER, VENT-AIR INTAKE SYSTEM OR IN ANY LOCATION FROM WHICH FUMES COULD REACH THE WATER HEATER OR VENT-AIR INTAKE SYSTEM.**

DO NOT install the water heater in any location where gasoline or flammable vapors are likely to be present.

Water heaters in residential garages must be installed and located, or protected, to avoid physical damage. For other installations refer to local codes. In the absence of local codes, the water heater must be installed in compliance with the National Fuel Gas Code, (ANSI Z223.1- Latest Edition), or in Canada CAN/CGA B149.1 Natural Gas Installation Code (Latest Edition) or CAN/CGA B149.2 Propane Installation Code (Latest Edition).

The location of this water heater is of the utmost importance. Before installing this water heater, read the installation section of these instructions. After reading these installation and operating instructions, select a location for the water heater where the floor is level and is easily accessible to gas and water supply lines. **DO NOT locate the water heater where water lines could be subjected to freezing temperatures**. **Make sure the cold water pipes are not located directly above the gas control so that condensate during humid weather does not drip on the controls**.

Water heater corrosion and component failure can be caused by the heating and breakdown of airborne chemical vapors. Examples of some typical compounds that are potentially corrosive are: spray can propellants, cleaning solvents, refrigerator and air conditioning refrigerants, swimming pool chemicals, calcium and sodium chloride, waxes and process chemicals. These materials are corrosive at very low concentration levels with little or no odor to reveal their presence. **NOTE: DAMAGE TO THE WATER HEATER CAUSED BY EXPOSURE TO CORROSIVE VAPORS IS NOT COVERED BY THE WARRANTY. DO NOT OPERATE THE WATER HEATER IF EXPOSURE HAS OR WILL OCCUR. DO NOT STORE ANY POTENTIALLY CORROSIVE COMPOUNDS IN THE VICINITY OF THE WATER HEATER.**

To comply with NSF requirements this water heater is to be:

a) Sealed to the floor with sealant, in a smooth and easily cleanable way, or
b) Installed with an optional leg kit that includes legs and/or extensions that provide a minimum clearance of 6” beneath the water heater.

⚠ WARNING

Liquefied petroleum gases/propane gas are heavier than air and will remain at floor level if there is a leak. Basements, crawl spaces, closets, and areas below ground level will serve as pockets for accumulation of leaking gas. Before lighting, smell all around the appliance area for gas. Be sure to smell next to the floor.

IF YOU SMELL GAS:

- **Do not try to light any appliance.**
- **Do not touch any electric switch; do not use any telephone in your building.**
- **Immediately call your gas supplier from a neighbor’s telephone. Follow the gas supplier’s instructions.**
- **If you cannot reach your gas supplier, call the fire department.**

DO NOT OPERATE APPLIANCE UNTIL THE LEAKAGE IS CORRECTED!

⚠ WARNING

DO NOT ATTEMPT TO LIGHT ANY GAS APPLIANCE IF YOU ARE NOT CERTAIN OF THE FOLLOWING:

- **Liquefied petroleum gases/propane gas and natural gas have an odorant added by the gas supplier that aids in the detection of the gas.**
- **Most people recognize this odor as a "sulfur" or "rotten egg" smell.**
- **Other conditions, such as "odorant fade" can cause the odorant to diminish in intensity, or "fade", and not be as readily detectable.**
- **If you have a diminished sense of smell, or are in any way unsure of the presence of gas, immediately contact your gas supplier from a neighbor's telephone.**
- **Gas detectors are available. Contact your gas supplier, or plumbing professional, for more information.**

The water heater must be located close enough to the outside wall to keep the venting distance within the maximum distance described in the installation instructions. Read the venting section in this installation instruction manual before locating the water heater.

This water heater must be located in an area where leakage of the tank or water line connections and the combination temperature and pressure relief valve will not result in damage to the area adjacent to the water heater or to lower floors of the structure. When such locations cannot be avoided, a suitable drain pan adequately piped for proper drainage must be installed under the water heater. The pan must not restrict combustion air flow. The drain pan must have a minimum length and width of at least 4 in. (10.2 cm) greater than the diameter of the water heater and must not restrict proper combustion air flow to the water heater. The drain pan, as described above, can be purchased from your plumbing professional. The drain pan must be piped to an adequate drain. The piping must be at least 3/4 inch *(1.9 cm)* in diameter and pitched for proper drainage.

It is recommended that a minimum clearance of four (4) inches *(10.2 cm)* be provided on the side of the water heater for servicing and maintenance of the combination temperature and pressure relief valve.

This water heater MUST be installed indoors out of the wind and weather.

Note: For California installation this water heater must be braced, anchored, or strapped to avoid falling or moving during an earthquake. See instructions for correct installation procedures. Instructions may be obtained from California Office of the State Architect, 400 P Street, Sacramento, CA 95814.

Minimum Clearances

⚠ WARNING

Failure to adhere to these installation and operating instructions may create a hazard to life and property and will nullify the warranty.

This installation must allow access to the front of the water heater and adequate clearance must be provided for servicing and operating this water heater. The water heater may be installed on either a combustible or non-combustible floor. If the water heater is to be installed directly on carpeting, it must be installed on top of a metal or wood panel extending beyond the full width and depth of the appliance by at least three (3) inches *(7.6 cm)* in any direction or, if the appliance is to be installed in an alcove or closet, the entire floor must be covered by the panel. The minimum clearances to combustibles for this water heater are: zero (0) inch *(0 cm)* from the sides and rear, five (5) inches *(12.7 cm)* from the front of the jacket, zero (0) inch *(0 cm)* from the vent connector and fifteen (15) inches *(38.1 cm)* from the jacket top.

Venting

This venting section is divided into two parts. Part I will cover venting specifications for 48 Gal (181.6 L) and 65 Gal (246.0 L) models. Part II will cover venting specifications for 40 Gal (151.4 L), 50 Gal (189.2 L), and 60 Gal (227.1 L) models. Refer to the rating plate located on the water heater for correct model identification.

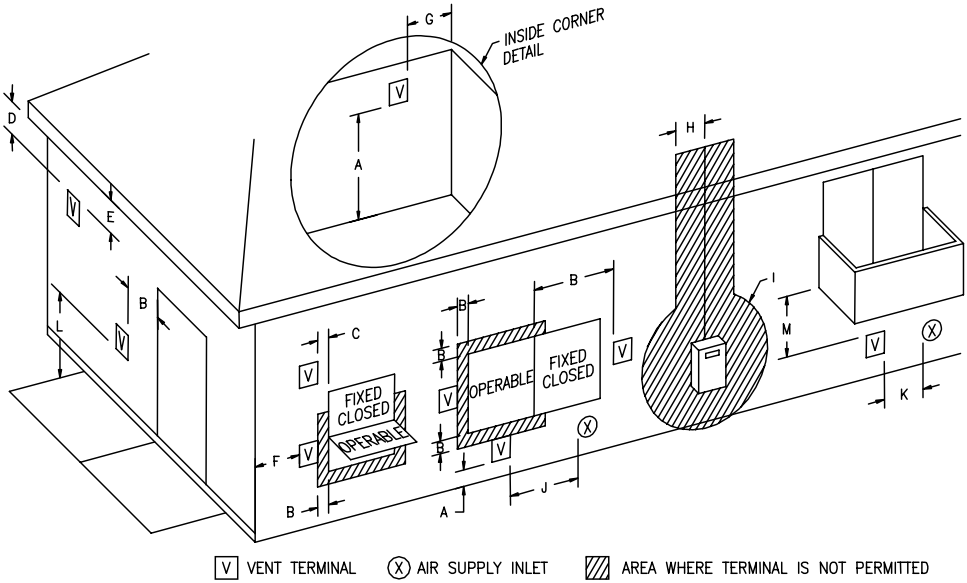

Figure 1 - Vent Terminal Clearances

Venting continued-

		Canadian Installations[1]	US Installations[2]
A=	Clearance above grade, veranda, porch, deck or balcony	12 inches (30 cm)	12 inches (30 cm)
B=	Clearance to window or door that may be opened	12 inches (30 cm)	4 feet (1.2 m) below or to the side of opening; 12 inches (30 cm) above opening
C=	Clearance to permanently closed window	*b	*b
D=	Vertical clearance to ventilated soffit located above the terminal within a horizontal distance of 2 feet (61 cm) from the center line of the terminal	*b	*b
E=	Clearance to unventilated soffit	*b	*b
F=	Clearance to outside corner	*b	*b
G=	Clearance to inside corner	*b	*b
H=	Clearance to each side of center line extended above meter/regulator assembly	3 feet (91 cm) within a height 15 feet (4.6 m) above the meter/regulator assembly	*b
I=	Clearance to service regulator vent outlet or oil tank vent	36 inches (91 cm)	*b
J=	Clearance to non-mechanical air supply inlet to building or the combustion air inlet to any other appliance	12 inches (30 cm)	4 feet (1.2m) below or to side of opening; 12 inches (30 cm) above opening.
K=	Clearance to a mechanical air supply inlet	6 feet (1.83 m)	3 feet (91 cm) above if within 10 feet horizontally
L=	Clearance above paved sidewalk or paved driveway located on public property	7 feet (2.13 m)†	7 feet (2.13 m)†
M=	Clearance under a veranda, porch, deck, or balcony	12 inches (30 cm) ‡	*b

[1] In accordance with the current CAN/CGA-B149 *Installation Codes*.
[2] In accordance with the current ANSI Z223.1-(Latest edition)/NFPA 54 *National Fuel Gas Code*.
† A vent shall not terminate directly above a sidewalk or paved driveway that is located between two single-family dwellings and serves both dwellings.
‡ Permitted only if a veranda, porch, deck or balcony is fully open on a minimum of two sides beneath the floor.
*a) A minimum clearance value determined by testing in accordance with section 2.20.
*b) “Clearance in accordance with local installation codes and the requirements of the gas supplier”.

The vent system must terminate so that proper clearances are maintained as cited in local codes or the latest edition of the National Fuel Gas Code, ANSI Z223.1.73.4e and 7.8a, b as follows:

1. Do not terminate near soffit vents or crawl space or other area where condensate or vapor could create a nuisance or hazard or cause property damage.
2. Do not terminate the exhaust vent terminal where condensate or vapor could cause damage or could be detrimental to the operation of regulators, relief valves, or other equipment.
3. Do not terminate the exhaust vent terminal over public area or walkways where condensate or vapor can cause nuisance or hazard.
4. The vent shall terminate a minimum of 12” (25.4 cm) above expected snowfall level to prevent blockage of vent termination.

Venting continued-

Vent pipes serving power vented appliances are classified by building codes as "vent connectors". Required clearances from combustible materials must be provided in accordance with information in this manual under LOCATION OF WATER HEATER and CLEARANCES, and with National Fuel Gas Code and local codes.

NOTICE

For installations in Canada, field supplied plastic vent piping must comply with CAN/CGA B149.1 (latest edition) and be certified to the Standard For Type BH Gas Venting Systems, ULC S636. Components of this listed system shall not be interchanged with other vent systems or unlisted pipe/fittings. All plastic components and specified primers and glues of the certified vent system must be from a single system manufacturer and not intermixed with other system manufacturer's vent system parts.
The supplied vent connector and vent termination are certified as part of the water heater.

Venting System Condensation

Condensate formation does not occur in all installations of power vented water heaters, but should be protected against on installations where condensation can form in the venting system.
Formation of condensation in the venting system of Power Vented water heaters is dependent upon installation conditions including, but not limited to:

ambient temperature and humidity of installation location;
ambient temperature and humidity of venting space;
vent distance and slope;
and product usage.

In order to effectively control condensate from adversely affecting the mechanical components of the water heater several methods may be employed:

1. For horizontal installations the vent pipe can be installed with a downward slope (not less than 1/8" (3 cm)) and away from the blower.
2. In order to prevent condensate from draining back into the blower (vertical or horizontal runs), an optional condensate kit is available as a service part (Condensate kit, p/n 239-45875-00). A factory supplied exhaust adapter with drain outlet mounts directly to the blower outlet and is secured with two hose clamps, one to the blower and the other to the vent pipe. Plastic tubing is provided to drain any accumulated condensate away from the water heater and to a suitable drain. The kit comes complete with instructions for proper installation.

Part I - Venting Specifications for:

48 Gallon (181.6 L)
65 Gallon (246.0 L)

NOTE: **Properly sized PVC, CPVC, or ABS* pipe must be used.**
This water heater is a power vented appliance and is designed to vent its products of combustion through 3" *(7.6 cm)* or 4" *(10.2 cm)* diameter Schedule 40 (solid or cellular core) vent pipe to the outdoors. This water heater may be either vented horizontally through the wall or vertically through the roof. Use a 3" *(7.6 cm)* to 4" *(10.2 cm)* reducer to connect to the vent outlet when using 4" *(10.2 cm)* vent pipe. Apply the proper cement at the joint locations. Table 1 lists the maximum vent lengths for this water heater using 3" *(7.6 cm)* vent pipe. If possible, locate the water heater so that the venting length and number of elbows are kept to the minimum distance necessary to reach the outside. If the installation requires venting lengths that exceed the lengths listed for 3" *(7.6 cm)* vent pipe in Table 1, then use 4" *(10.2 cm)* vent pipe for the vent connector.

Table 2 lists the venting distances allowed with 4" *(10.2 cm)* diameter vent pipe. **When venting with 4" *(10.2 cm)* vent pipe**, use a 4" *(10.2 cm)* to 3" *(7.6 cm)* reducer to exit through the building wall with 3" *(7.6 cm)* vent pipe. Use the 3" *(7.6 cm)* vent terminal supplied with the water heater to terminate on the outside of the building. If the length of 3" *(7.6 cm)* vent pipe needed to go through the wall is greater than 14" *(35.5 cm)*, use 4" *(10.2 cm)* to go through the wall and reduce to 3" *(7.6 cm)* vent pipe immediately after exiting the outside wall. Refer to the venting illustrations on the following pages. Make sure the vent pipe terminal elbow fitting is at least 1" *(2.5 cm)* away from the edge of the wall.

*Only vent pipe certified to ULC S636 may be used in Canada.

TABLE 1 - VENT CONNECTOR LENGTHS FOR 3" *(7.6 cm)* DIAMETER VENT PIPE

Terminating	# of Elbows (excl. vent term.)	Maximum straight Length ft *(m)*	Minimum straight Length ft *(m)*
		48, 65 gal.	
Through the Wall	1	55 *(16.8)*	2 *(.6)*
Through the Wall	2	50 *(15.2)*	2 *(.6)*
Through the Wall	3	45 *(13.7)*	2 *(.6)*
Through the Wall	4	40 *(12.2)*	2 *(.6)*
Through the Roof	0	60 *(18.3)*	7 *(2.1)*
Through the Roof	1	55 *(16.8)*	7 *(2.1)*
Through the Roof	2	50 *(15.2)*	7 *(2.1)*
Through the Roof	3	45 *(13.7)*	7 *(2.1)*

TABLE 2 -VENT CONNECTOR LENGTHS FOR 4" *(10.2 cm)* DIAMETER VENT PIPE			
Terminating	**# of 90° Elbows (excl. vent term.)**	**Maximum straight Length** ft *(m)* **48, 65 gal.**	**Min straight Length** ft *(m)*
Through the Wall	1	175 *(53.3)*	10 *(3.1)*
Through the Wall	2	170 *(51.8)*	10 *(3.1)*
Through the Wall	3	165 *(50.3)*	10 *(3.1)*
Through the Wall	4	160 *(48.8)*	10 *(3.1)*
Through the Wall	5	155 *(47.2)*	10 *(3.1)*
Through the Roof	0	180 *(54.9)*	15 *(4.6)*
Through the Roof	1	175 *(53.3)*	15 *(4.6)*
Through the Roof	2	170 *(51.8)*	15 *(4.6)*
Through the Roof	3	165 *(50.3)*	15 *(4.6)*
Through the Roof	4	160 *(48.8)*	15 *(4.6)*

NOTE: When using 4" *(10.2 cm)* vent pipe, use a 4" *(10.1 cm)* to 3" *(7.6 cm)* reducer and exit the building wall with 3" *(7.6 cm)* vent pipe using the 3" *(7.6 cm)* 90° vent terminal supplied. Two 45° elbows are equivalent to one 90° elbow.

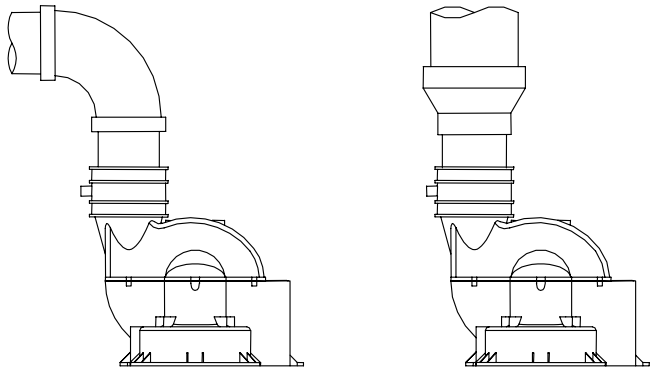

CONNECTION TO 3" (7.6 CM) VENT PIPE

CONNECTION TO A 3" (7.6 CM) TO 4" (10.2 CM) REDUCER

Figure 2

IMPORTANT

All of the Venting connections must be leak checked with a soap and water solution upon initial start up of the water heater. Any leaks must be repaired before continuing operation of the water heater.

THROUGH THE WALL VENTING: (HORIZONTAL VENTING)

Cut a 3 1/2 in. *(8.9 cm)* diameter hole in the wall at the point where the vent connector is going to pass through the wall. Use the proper cement to secure the 90° vent terminal provided with the water heater to the vent connector. The distance between the edge of the 90° vent terminal and the exterior wall (see Figure 3) must be 1 in. *(2.5 cm)*. Use the proper cement and assembly procedures to secure the vent connector joints between the terminal and the blower outlet. Provide support brackets for every 5 feet *(1.5m)* of horizontal vent.

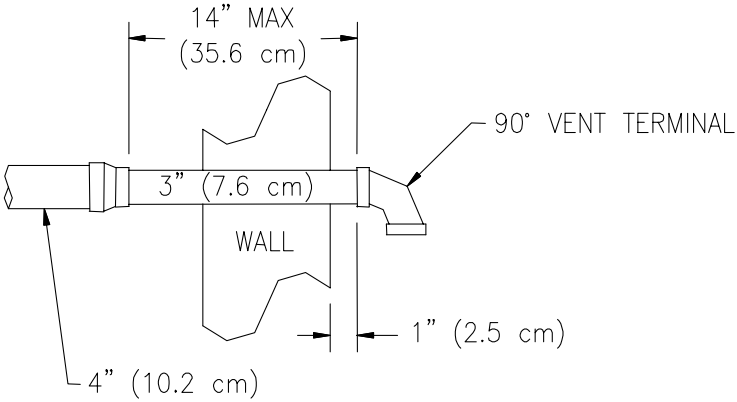

4" VENT INSTALLATION

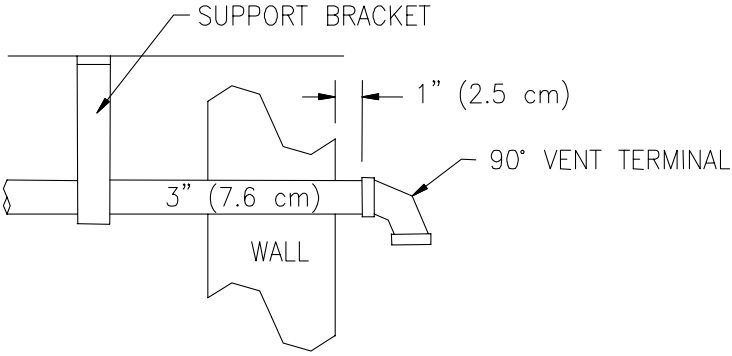

3" VENT INSTALLATION

Figure 3

THROUGH THE ROOF VENTING: (VERTICAL VENTING)

Cut the necessary holes through the roof and ceiling and install the vent connector as shown in Figure 4. Make sure that the installation meets the local codes and/or The National Fuel Gas Code ANSI Z223.1 (Latest Edition) or CGA/CAN B149 Installation Code (latest edition).

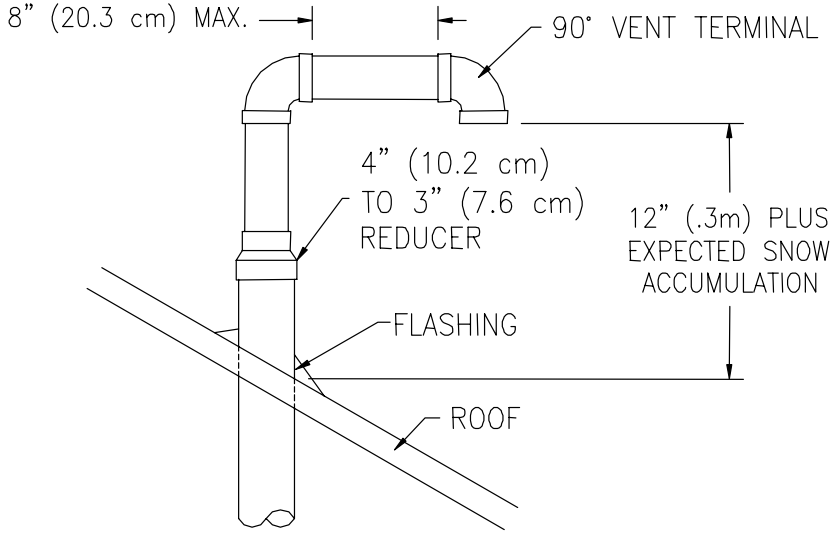

Figure 4

NOTE: For installations requiring both horizontal and vertical runs, the following rule must be followed: Total length of straight pipe (both horizontally and vertically) must not exceed the allowable length listed in the "Through The Wall" section of the table for total number of elbows used.

THROUGH THE WALL VENTING WITH LOW GROUND CLEARANCE:
When venting cannot exit through the wall at a height greater than or equal to 12" *(30.5 cm)* above the ground, or anticipated snow level, the installation must be modified as shown below (see Figure 5). Refer to Table 3 for maximum venting lengths using 3" *(7.6 cm)* vent pipe or Table 4 for maximum lengths using 4" *(10.2 cm)* vent pipe.

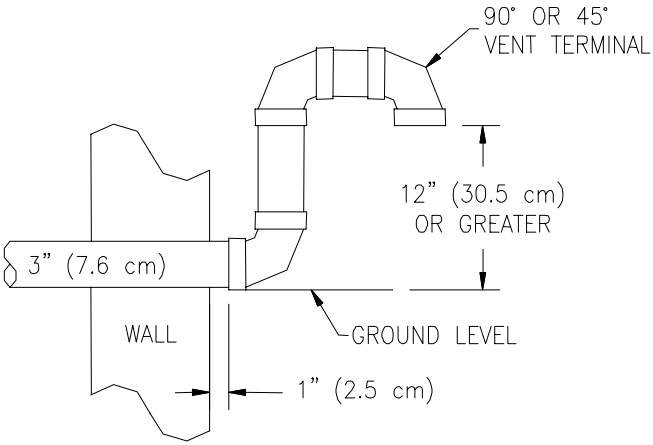

3" VENT INSTALLATION

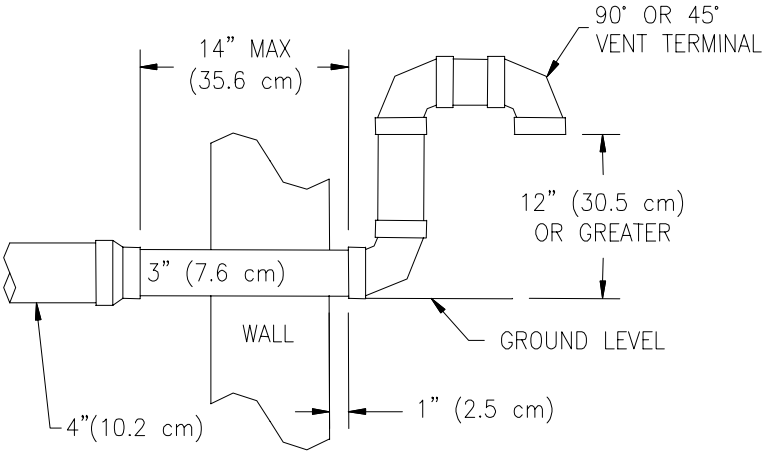

4" VENT INSTALLATION

Figure 5

TABLE 3			
3" *(7.6 cm)* VENT CONNECTOR LENGTHS FROM INSIDE WALL FOR LOW GROUND CLEARANCE INSTALLATIONS			
Terminating	**# of Elbows (exc. Vent term.)**	**Max Straight Length** *ft (m)* **48,65 gal.**	**Min straight Length** *ft (m)*
(2) 90° Elbows with (1) 90° Elbow	1	40 *(12.2)*	5 *(1.5)*
(2) 90° Elbows with (1) 90° Elbow	2	35 *(10.7)*	5 *(1.5)*
(2) 90° Elbows with (1) 90° Elbow	3	30 *(9.1)*	5 *(1.5)*
(2) 90° Elbows with (1) 90° Elbow	4	25 *(7.6)*	5 *(1.5)*

TABLE 4			
4" *(10.2 cm)* VENT CONNECTOR LENGTHS FROM INSIDE WALL FOR LOW GROUND CLEARANCE INSTALLATIONS			
Terminating (Reduce 4" to 3") *(Reduce 10.1 cm to 7.6 cm)*	**# of Elbows (exc. Vent term.)**	**Max straight Length** *ft (m)* **48,65 gal.**	**Min straight Length** *ft (m)*
(2) 90° Elbows with (1) 90° Elbow	1	160 *(48.8)*	10 *(3.1)*
(2) 90° Elbows with (1) 90° Elbow	2	155 *(47.2)*	10 *(3.1)*
(2) 90° Elbows with (1) 90° Elbow	3	150 *(45.7)*	10 *(3.1)*
(2) 90° Elbows with (1) 90° Elbow	4	145 *(44.2)*	10 *(3.1)*
(2) 90° Elbows with (1) 90° Elbow	5	140 *(42.7)*	10 *(3.1)*

HIGH ALTITUDE INSTALLATIONS FOR ELEVATIONS OVER 2,500 FEET *(762 m)* ABOVE SEA LEVEL

The capacity of the induced draft blower declines with increasing altitude due to a reduction in the air density. In order to assure safe and reliable performance of the water heater, contact the supplier for high altitude kit.

Part II - Venting Specifications for:

40 Gallon (151.4 L)
50 Gallon (189.2 L)
60 Gallon (227.1 L)

This water heater is a power vented appliance and is designed to vent its products of combustion through 2” *(5.1 cm)* or 3” *(7.6 cm)* diameter Schedule 40 (solid or cellular core) vent pipe to the outdoors. The water heater may be either vented horizontally through the wall or vertically through the roof. Use a 3” *(7.6 cm)* to 2” *(5.1 cm)* reducer to connect to the vent outlet when using 3” *(7.6 cm)* vent pipe. Apply proper cement at joint locations. Table 5 lists the maximum vent lengths for this water heater using 2” *(5.1 cm)* vent pipe. If possible, locate the water heater so that the venting length and number of elbows are kept to the minimum distance necessary to reach the outside. If the installation requires venting lengths that exceed the lengths listed for 2” *(5.1 cm)* vent pipe in Table 5 then use 3” *(7.6 cm)* vent pipe for the vent connector.

Table 6 lists the venting distances allowed with 3” *(7.6 cm)* diameter vent pipe. **When venting with 3” *(7.6 cm)* vent pipe**, use a 3” *(7.6 cm)* to 2” *(5.1 cm)* reducer to exit through the building wall with 2” (5.1 cm) vent pipe. Use the 2” *(5.1 cm)* vent terminal supplied with the water heater to terminate on the outside of the building. If the length of the 2” *(5.1 cm)* needed to go through the wall is greater than 14” *(35.6 cm)*, use 3” *(7.6 cm)* vent pipe to go through the wall and reduce to 2” *(5.1 cm)* vent pipe immediately after exiting the outside wall. Refer to the venting illustrations on the following pages. Make sure the vent pipe terminal is at least 1” *(2.5 cm)* away from the edge of the wall.

TABLE 5			
VENT CONNECTOR LENGTHS FOR 2” *(5.1cm)* DIAMETER VENT PIPE			
Terminating	**# of 90° Elbows (excluding vent terminal)**	**Max straight Length** *ft (m)*	**Min straight Length** *ft (m)*
Through the Wall	1	45 *(13.7)*	2 *(.6)*
Through the Wall	2	40 *(12.2)*	2 *(.6)*
Through the Wall	3	35 *(10.7)*	2 *(.6)*
Through the Wall	4	30 *(9.1)*	2 *(.6)*
Through the Roof	0	50 *(15.2)*	7 *(2.1)*
Through the Roof	1	45 *(13.7)*	7 *(2.1)*
Through the Roof	2	40 *(12.2)*	7 *(2.1)*
Through the Roof	3	35 *(10.7)*	7 *(2.1)*
Through the Roof	4	30 *(9.2)*	7 *(2.1)*

TABLE 6			
VENT CONNECTOR LENGTHS FOR 3" *(7.6 cm)* DIAMETER VENT PIPE			
Terminating	**# of 90° Elbows (excluding vent terminal)**	**Max straight Length** *ft (m)*	**Min straight Length** *ft (m)*
Through the Wall	1	115 *(35)*	10 *(3.1)*
Through the Wall	2	110 *(33.5)*	10 *(3.1)*
Through the Wall	3	105 *(32.0)*	10 *(3.1)*
Through the Wall	4	100 *(30.5)*	10 *(3.1)*
Through the Wall	5	95 *(29.0)*	10 *(3.1)*
Through the Roof	0	120 *(36.6)*	15 *(4.6)*
Through the Roof	1	115 *(35)*	15 *(4.6)*
Through the Roof	2	110 *(33.5)*	15 *(4.6)*
Through the Roof	3	105 *(32.0)*	15 *(4.6)*
Through the Roof	4	100 *(30.5)*	15 *(4.6)*

NOTE: When using 3" *(7.6 cm)* vent pipe, use a 3" *(7.6 cm)* to 2" *(5.1 cm)* reducer and exit the building wall with 2" *(5.1 cm)* vent pipe using the 2" *(5.1 cm)* 45° vent terminal supplied. Two 45° elbows are equivalent to one 90° elbow. Each 90° elbow is equivalent to 5 feet *(1.5 m)* of straight vent pipe.

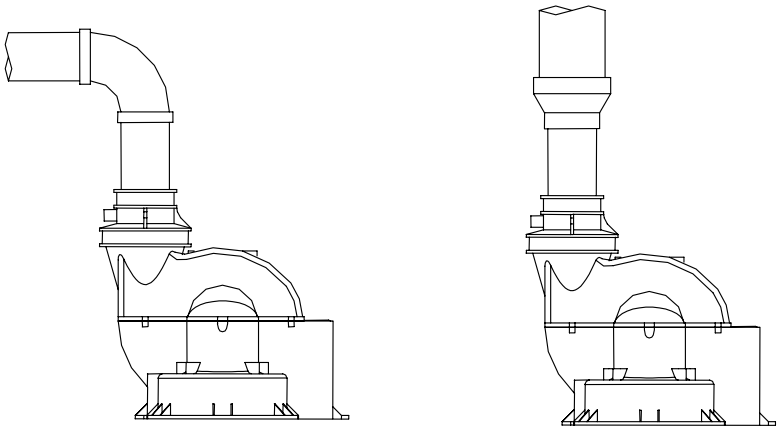

CONNECTION TO 2" (5.1 CM) VENT PIPE

CONNECTION TO 3" (7.6 CM) VENT PIPE

Figure 6

IMPORTANT

All of the Venting connections must be leak checked with a soap and water solution upon initial start up of the water heater. Any leaks must be repaired before continuing operation of the water heater.

NOTE: **Properly sized PVC, CPVC or ABS pipe must be used.**

THROUGH THE WALL VENTING: (HORIZONTAL VENTING)

Cut a 2 1/2 in. *(6.4 cm)* diameter hole in the wall at the point where the vent connector is going to pass through the wall. Use the proper cement to secure the 45° vent terminal provided with the water heater to the vent connector. The distance between the edge of the 45° vent terminal and the exterior wall (see Figure 7) must be at least 1 in. *(2.5 cm)*. Use the proper cement and assembly procedures to secure the vent connector joints between the terminal and the blower outlet. Provide support brackets for every 5 feet *(1.5 m)* of horizontal vent.

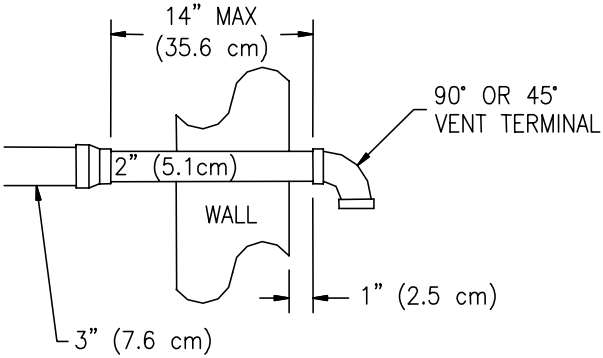

3" VENT INSTALLATION

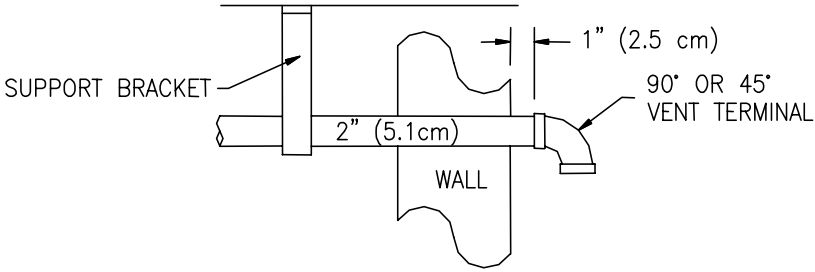

2" VENT INSTALLATION

Figure 7

THROUGH THE ROOF VENTING: (VERTICAL VENTING)

Cut the necessary holes through the roof and ceiling and install the vent connector as shown in Figure 8. Make sure that the installation meets the local codes and/or The National Fuel Gas Code ANSI Z223.1 (Latest Edition) or CGA/CAN B149 Installation Codes (latest edition).

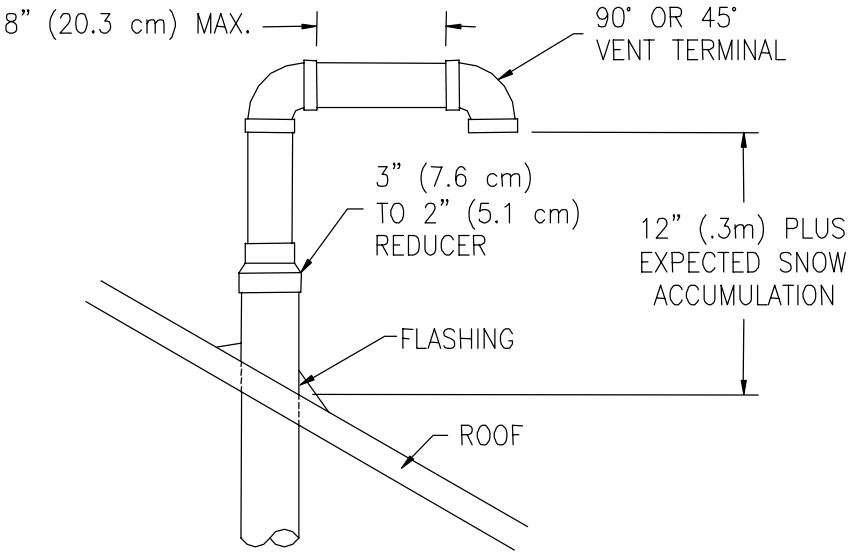

Figure 8

THROUGH THE WALL VENTING WITH LOW GROUND CLEARANCE:
When venting cannot exit through the wall at a height greater than or equal to 12" *(30.5 cm)* from the ground or from the anticipated snow level, then the installation must be modified as shown below (see Figure 9). Refer to Table 7 for maximum venting lengths using 2" *(5.1 cm)* vent pipe or Table 8 for maximum lengths using 3" *(7.6 cm)* vent pipe.

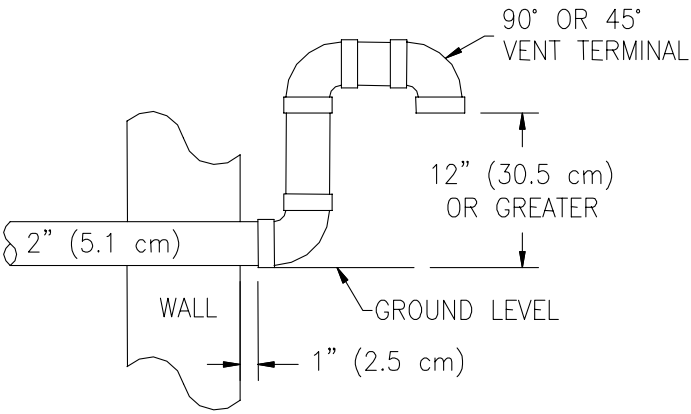

2" VENT INSTALLATION

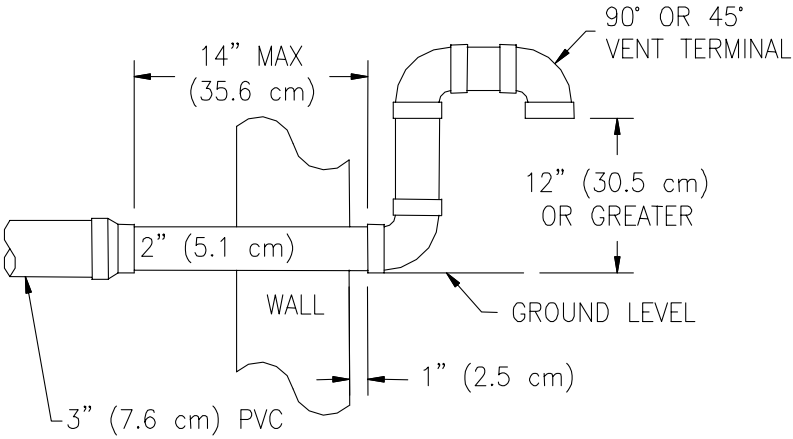

3" VENT INSTALLATION

Figure 9

NOTE: For installations requiring both horizontal and vertical runs, the following rule must be followed: Total length of straight pipe (both horizontally and vertically) must not exceed the allowable length listed in the Table 7 and 8 for total number of elbows used.

TABLE 7			
2" (5.1 cm) VENT PIPE LENGTHS FROM INSIDE WALL FOR LOW GROUND CLEARANCE INSTALLATIONS			
Terminating	**# of Elbows (exc. Vent term.)**	**Max straight Length** *ft (m)*	**Min straight Length** *ft (m)*
(2) 90° Elbows with Vent Terminal	1	30 *(9.1)*	2 *(.6)*
(2) 90° Elbows with Vent Terminal	2	25 *(7.6)*	2 *(.6)*
(2) 90° Elbows with Vent Terminal	3	20 *(6.1)*	2 *(.6)*
(2) 90° Elbows with Vent Terminal	4	15 *(4.6)*	2 *(.6)*

TABLE 8			
3" (7.6 cm) VENT CONNECTOR LENGTHS FROM INSIDE WALL FOR LOW GROUND CLEARANCE INSTALLATIONS			
Terminating (Reduce 3" to 2") (Reduce 7.6 cm to 5.1 cm)	**#of Elbows (exc. Vent term.)**	**Maximum Length** *ft (m)*	**Minimum Length** *ft (m)*
(2) 90° Elbows with Vent Terminal	1	100 (*30.5)*	10 *(3.1)*
(2) 90° Elbows with Vent Terminal	2	95 *(29.0)*	10 *(3.1)*
(2) 90° Elbows with Vent Terminal	3	90 (*27.4)*	10 *(3.1)*
(2) 90° Elbows with Vent Terminal	4	85 *(25.9)*	10 *(3.1)*
(2) 90° Elbows with Vent Terminal	5	80 *(24.4)*	10 *(3.1)*

HIGH ALTITUDE INSTALLATIONS FOR ELEVATIONS OVER 2,500 FEET *(610 m)* ABOVE SEA LEVEL

The capacity of the induced draft blower declines with increasing altitude due to a reduction in the air density. In order to assure safe and reliable performance of the water heater, contact the supplier for high altitude kit.

Vent Pipe Preparation and Joining

Most failures in vent systems result from improper preparation and joining of pipe and fittings. The guidelines below must be followed when installing the venting system. If you have any question about the application or installation of the venting system, contact the vent pipe manufacturer, supplier, or your plumbing professional.

1) Specific cleaners, solvents, primers and cements are available for PVC, CPVC, and ABS pipe. Be sure these materials match the type of pipe to be installed. The vent pipe manufacturers joining instructions must be followed in all cases. Never use all-purpose cements, commercial glues and adhesives or ABS cement to join PVC or CPVC pipe and fittings.
   a) **CLEANERS, SOLVENTS, PRIMERS AND CEMENTS ARE FLAMMABLE. Do not store or use these materials near heat or open flame, or in the vicinity of other appliances.**
2) Use proper cutting, deburring and applicator tools to ensure proper preparation and joining of pipe and fittings.
   a) Cutting Tools
      i) A square cut must be achieved with a miter box saw or pipe cutter to ensure a proper mating with the female. If a pipe cutter is used, the burr created at the outer edge of the pipe must be removed.
   b) Deburring Tools
      i) A file, knife or plastic deburring tool can be used to remove burrs. Burrs must be removed from the inside and outside edges of the pipe to ensure a proper seal.
   c) Applicator Tools
      i) A natural bristle paintbrush or roller may be used to apply cement. Prompt application of the cement is important due its fast drying properties.
3) Inspection, Cleaning, Priming and Cementing
   a) Inspect the pipe inside and out for dirt, dust, moisture or grease etc. Check pipe and fittings for splits or cracks and replace if found.
   b) Clean pipe and fittings are imperative for proper joining. Following cutting and deburring, wipe away any foreign material with a clean dry rag. If wiping fails to thoroughly clean surfaces, chemical cleaning is necessary.
   c) Primer must be applied to the pipe surface and fitting socket with a natural bristle brush. This serves to soften and prepare the PVC, CPVC or ABS for cementing.

d) Cementing must be done quickly to avoid over-drying before joining.
   i) Apply one coat to the outside end of the pipe at a width slightly greater than the depth of the socket.
   ii) Apply a coat around the inside of the fitting socket.
   iii) Apply a second coat around the end of the pipe.

4) Joining
   a) Joints should be made immediately after cement is applied.
   b) After fully inserting pipe into fitting socket, hold joint together for about 15 to 20 seconds.
   c) Remove excess cement from around pipe and fitting with a clean rag.
   d) Cement drying times may vary. Be sure to allow for the recommended drying time before disturbing joints.

For more specific and detailed information about the above, contact the vent pipe manufacturer, supplier, or competent professional.

Combustion Air Supply

⚠WARNING

Liquefied petroleum gases/propane gas are heavier than air and will remain at floor level if there is a leak. Basements, crawl spaces, closets and areas below ground level will serve as pockets for accumulation of leaking gas. Before lighting, smell all around the appliance area for gas. Be sure to smell next to the floor.

IF YOU SMELL GAS:

- Do not try to light any appliance.
- Do not touch any electric switch; do not use any telephone in your building.
- Immediately call your gas supplier from a neighbor's telephone. Follow the gas supplier's instructions.
- If you cannot reach your gas supplier, call the fire department.

DO NOT OPERATE APPLIANCE UNTIL LEAKAGE IS CORRECTED!

IMPORTANT

The flow of combustion and ventilating air must not be obstructed.

Provide adequate air for combustion and ventilation. An insufficient supply of air will cause recirculation of combustion products resulting in air contamination that may be hazardous to life. Such a condition often will result in a yellow, luminous burner flame, causing carbon build up or sooting of the combustion chamber, burners, and flue tubes with possible damage to the water heater.

When an exhaust fan is installed in the same room with a water heater, sufficient openings for air must be provided in the walls. Undersized openings will cause air to be drawn into the room through the venting, causing recirculation of combustion products.

Unconfined Spaces

In unconfined spaces in buildings, infiltration may be adequate to provide air for combustion, ventilation, and dilution of flue gases. However, in buildings of tight construction (for example, weather stripping, heavily insulated, caulked, vapor barrier, etc.), additional air may need to be provided using the methods described under CONFINED SPACES: All Air From Outdoors or Specially Engineered Installations.

Confined Spaces

Confined spaces are spaces defined as having less than 50 $ft.^3$/1000 BTU *(1.4 m^3/0.29 kw-hr*).

All Air From Inside the Building: The confined space must be provided with two permanent openings communicating directly with an additional room(s) of sufficient volume so that the combined volume of all spaces meets the criteria for an unconfined space. The total input of all gas utilization equipment installed in the combined space must be considered in making this determination. Each opening must have a minimum free area of 1 square inch per 1000 BTU *(6.5 cm^2/0.29 kw)* per hour of the total input rating of all gas utilization equipment in the confined space, but not less than 100 square inches (645 cm^2). One opening must be within 12 inches *(31 cm)* of the top and one within 12 inches *(31 cm)* of the bottom of the enclosure.

All Air From Outdoors: The confined space must be provided with two permanent openings, one commencing within 12 inches *(31 cm)* of the top and one commencing within 12 inches *(31 cm)* from the bottom of the enclosure. The openings must communicate directly, or by ducts, with the outdoors or spaces (crawl or attic) that freely communicate with the outdoors.

1. When directly communicating with the outdoors, each opening must have a minimum free area of 1 square inch per 4000 BTU *(6.5 cm^2/1.2 kw)* per hour of total input rating of all equipment in the enclosure.
2. When communicating with the outdoors through vertical ducts, each opening must have a minimum free area of 1 square inch per 4000 BTU *(6.5 cm^2/1.2 kw)* per hour of total input rating of all equipment in the enclosure.
3. When communicating with the outdoors through horizontal ducts, each opening must have a minimum free area of 1 square inch per 2000 BTU *(6.5 cm^2/0.6 kw)* per hour of total input rating of all equipment in the enclosure.
4. When ducts are used, they must be of the same cross-sectional area as the free area of the openings to which they connect. The minimum dimension of rectangular air ducts must be not less than 3 inches *(7.5 cm).*

Specially Engineered Installations
The requirements noted under CONFINED SPACES above must not necessarily govern when special engineering, approved by the authority having jurisdiction, provides an adequate supply of air for combustion, ventilation, and dilution of flue gases.

Water Connections

NOTE: *BEFORE PROCEEDING WITH THE INSTALLATION, CLOSE THE MAIN WATER SUPPLY VALVE.*
After shutting off the main water supply, open a faucet to relieve the water line pressure to prevent any water from leaking out of the pipes while making the water connections to the water heater. After the pressure has been relieved, close the faucet. The COLD water inlet and HOT water outlet are identified on the top of the water heater. The fittings at the cold water inlet and hot water outlet are dielectric waterway fittings with 3/4" NPT male thread. Make the proper plumbing connections between the water heater and the plumbing system to the house. Install a shut-off valve in the cold water supply line.

⚠CAUTION

If sweat fittings are to be used **DO NOT** apply heat to the nipples on top of the water heater. Sweat the tubing to the adapter before fitting the adapter to the water connections. It is imperative that heat is not applied to the nipples containing a plastic liner.

⚠WARNING

FAILURE TO INSTALL AND MAINTAIN A NEW, LISTED 3/4" X 3/4" TEMPERATURE AND PRESSURE RELIEF VALVE WILL RELEASE THE MANUFACTURER FROM ANY CLAIM THAT MIGHT RESULT FROM EXCESSIVE TEMPERATURE AND PRESSURES.

If this water heater is installed in a closed water supply system, such as one having a back-flow preventer in the cold water supply, provisions must be made to control thermal expansion. **DO NOT** operate this water heater in a closed system without provisions for controlling thermal expansion. Your water supplier or local plumbing inspector should be contacted on how to control this situation.

After installation of the water lines, open the main water supply valve and fill the water heater. While the water heater is filling, open several hot water faucets to allow air to escape from the water system. When a steady stream of water flows through the faucets, close them and check all water connections for possible leaks. **NEVER OPERATE THE WATER HEATER WITHOUT FIRST BEING CERTAIN IT IS FILLED WITH WATER.**

⚠WARNING

For protection against excessive temperatures and pressure, install temperature and pressure protective equipment required by local codes, but not less than a combination temperature and pressure relief valve certified by a nationally recognized testing laboratory that maintains periodic inspection of production of listed equipment or materials as meeting the requirements of the Standard for *Relief Valves and Automatic Gas Shutoff Devices for Hot Water Supply Systems, ANS Z21.22 or the Standard CAN1-4.4. Temperature and Pressure* and the Standard *CAN1-4.4, Temperature, Pressure, Temperature and Pressure Relief Valves and Vacuum Relief Valves*. The combination temperature and pressure relief valve must be marked with a maximum set pressure not to exceed the maximum working pressure of the water heater. The combination temperature and pressure relief valve must also have an hourly rated temperature steam BTU discharge capacity not less than the hourly rating of the water heater.

Install the combination temperature and pressure relief valve into the opening provided and marked for this purpose on the water heater.

Note: Some models may already be equipped or supplied with a combination temperature and pressure relief valve. Verify that the combination temperature and pressure relief valve complies with local codes. If the combination temperature and pressure relief valve does not comply with local codes, replace it with one that does. Follow the installation instructions above on this page.

Install a discharge line so that water discharged from the combination temperature and pressure relief valve will exit within six (6) inches *(15.2 cm)* above, or any distance below the structural floor and cannot contact any live electrical part. The discharge line is to be installed to allow for complete drainage of both the combination temperature and pressure relief valve and the discharge line. The discharge opening must not be subjected to blockage or freezing. **DO NOT** thread, plug or cap the discharge line. It is recommended that a minimum clearance of four (4) inches *(10.2 cm)* be provided on the side of the water heater for servicing and maintenance of the combination temperature and pressure relief valve.

Do not place a valve between the combination temperature and pressure relief valve and the tank.

⚠WARNING

Hydrogen gas can be produced in an operating water heater that has not had water drawn from the tank for a long period of time (generally two weeks or more). Hydrogen gas is extremely flammable. To prevent the possibility of injury under these conditions, we recommend the hot water faucet to be open for several minutes at the kitchen sink before you use any electrical appliance which is connected to the hot water system. If hydrogen is present, there will be an unusual sound such as air escaping through the pipes as hot water begins to flow. Do not smoke or have open flame near the faucet at the time it is open.

This water heater can deliver scalding temperature water at any faucet in the system. Be careful whenever using hot water to avoid scalding injury. Certain appliances such as dishwashers and automatic clothes washers may require increased temperature water. By setting the thermostat on this water heater to obtain the increased temperature water required by these appliances, you may create the potential for scald injury. To protect against injury, you should install an ASSE approved mixing valve in the water system. This valve will reduce point of discharge temperature by mixing cold and hot water in branch supply lines. Such valves are available from the manufacturer of this water heater or a local plumbing supplier. Please consult with a plumbing professional.

Water temperature over 125°F can cause severe burns instantly or death from scalds.

Children, disabled and elderly are at highest risk of being scalded.

Review this instruction manual before setting temperature at water heater.

Feel water before bathing or showering.

Temperature limiting valves are available.

APPROXIMATE TIME/TEMPERATURE RELATIONSHIPS IN SCALDS	
120°F (49°C)	More than 5 minutes
125°F (52°C)	1½ to 2 minutes
130°F (54°C)	About 30 seconds
135°F (57°C)	About 10 seconds
140°F (60°C)	Less than 5 seconds
145°F (63°C)	Less than 3 seconds
150°F (66°C)	About 1½ seconds
155°F (68°C)	About 1 second

Gas Connections

The gas supply lines must meet all requirements of the National Fuel Gas Code (ANSI Z223.1-Latest Edition), or in Canada CAN/CGA B149.1 Natural Gas Installation Code (Latest Edition) or CAN/CGA B149.2 Propane Installation Code (Latest Edition).

The minimum permissible gas supply pressure for the purpose of input adjustment is one (1.0) inch *(0.25 kPa)* water column above the operating manifold pressure. See the rating plate and gas valve for the manifold pressure and gas type. The maximum permissible gas supply pressure is fourteen (14.0) inches *(3.5 kPa)* water column for natural gas and liquefied petroleum gases/propane gas.

1. Connect this water heater only to the type of gas (Natural or Propane gas) as shown on the rating plate. Use clean black iron pipe or equivalent material approved by local codes and ordinances. (Dirt and scale from the pipe can enter the gas valve and cause it to malfunction). The inlet gas line must have a minimum length of three (3) inches *(7.6 cm)* drip leg *(sediment trap)* installed as close to the water heater's gas valve as possible. A ground joint union must be installed as close to the water heater as possible in the gas supply line feeding the water heater to permit servicing of the water heater. Compounds used on the threaded joints of the gas piping must be resistant to the action of liquefied petroleum gases/propane gas. DO NOT apply pipe dope to the gas valve inlet and make certain that no pipe dope has become lodged in the inlet screen of the gas valve. Extreme care must be taken to ensure no pipe dope enters the gas valve. Avoid excessive torque when tightening the gas supply line to the gas valve. Excessive torque may result in cracking of the gas valve housing and could create a gas leak. The suggested maximum torque is 31.5 ft. lbs. (4.4 kg-m).

⚠WARNING

The manufacturer of this water heater will not be liable for any damage or injury caused as a result of a cracked gas inlet as a result of excessive torque.

2. This water heater and its gas connection must be leak tested before placing the water heater in operation. Check for gas leaks with a soap and water solution and a brush or a commercial leak detector fluid. **NEVER USE A MATCH OR OPEN FLAME FOR TESTING!**

⚠CAUTION

The water heater and individual shutoff valve must be disconnected from the gas supply piping system during any pressure testing of the system at test pressures in excess of 1/2 psi (3.5 kPa). The water heater must be isolated from the gas supply piping system by closing its manual shutoff valve during any pressure testing of the gas supply system at test pressures equal to or less than 1/2 psi (3.5 kPa). The supply line must be capped when not connected to the water heater.

3. While checking for leaks care must be taken to prevent solution from contacting the electrical connections at the control. If electrical connections at the control become wet, they must be thoroughly dried before attempting to operate the water heater.

Electrical Connections

All electrical wiring and connections must be in accordance with the National Electric Code ANSI/NFPA No. 70 (latest edition), or the Canadian Electrical Code C22.1 (latest edition) and any local codes which may apply. The water heater must be electrically grounded.

If a flexible line cord and plug is permitted by local code, then provide a (3) three wire grounding type receptacle within 6 feet *(1.9 m)* of the water heater and use the flexible cord provided. Do not plug the line cord into a receptacle that can have its power supply interrupted by a switch that is used to turn on and off lights.

If wiring in conduit is required, cut the flexible line cord flush with the bushing. Remove the junction box cover and pull the pressure switch outside of the junction box. Cut the three wires from the line cord at the bushing inside of the junction box. Drill a hole to receive the ½" electrical conduit connector on the backside of the blower. Wire the power supply into the circuit at the appropriate locations. Replace the pressure switch and junction box cover.

⚠CAUTION

Turn off or disconnect the electrical power supply to the water heater before servicing. Label all wires prior to disconnection when servicing controls. Wiring errors can cause improper and dangerous operation. Verify proper operation after servicing.

Wiring Diagram

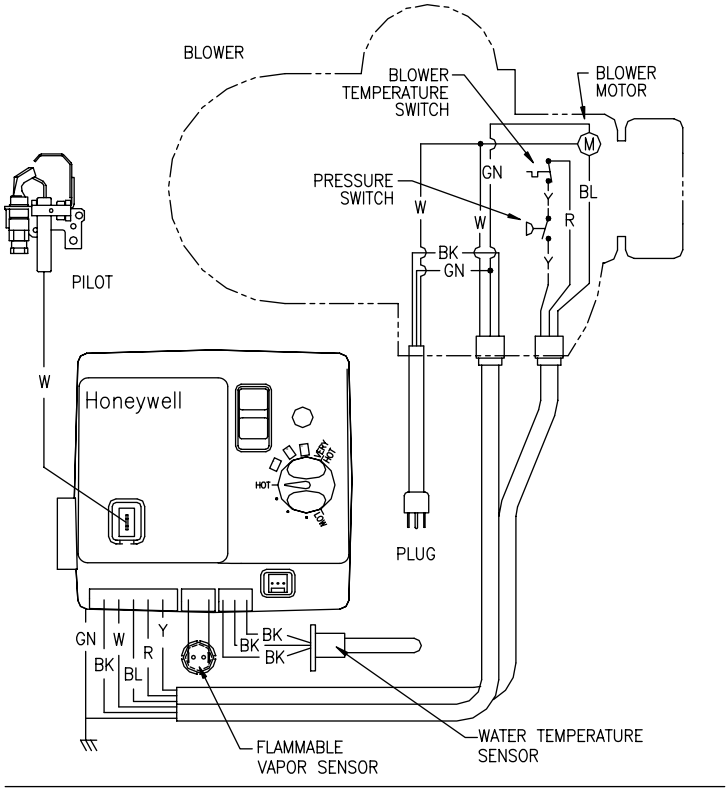

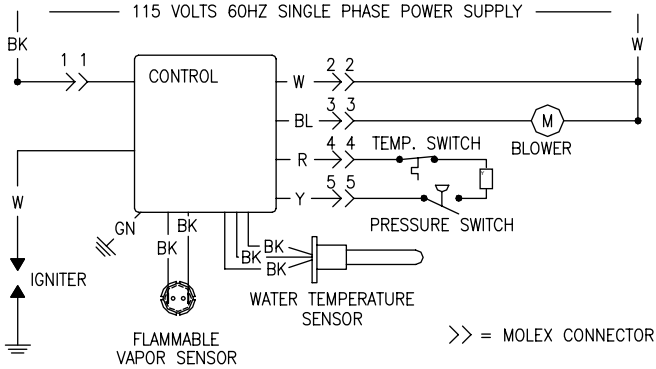

ELECTRICAL RATING
115 VOLTS 60HZ LESS THAN 12 AMPS

IF ANY OF THE ORIGINAL WIRES SUPPLIED WITH THE APPLIANCE MUST BE REPLACED, IT MUST BE REPLACED WITH APPLIANCE WIRE MATERIAL WITH A MINIMUM TEMPERATURE RATING OF 105°C AND A MINIMUM SIZE OF NO. 18 AWG.

Figure 10

GENERAL OPERATION

⚠WARNING

Water heaters are heat producing appliances. To avoid damage or injury there must be no materials stored against the water heater or vent-air intake system, and proper care must be taken to avoid unnecessary contact (especially by children) with the water heater and vent-air intake system. **UNDER NO CIRCUMSTANCES MUST FLAMMABLE MATERIALS, SUCH AS GASOLINE OR PAINT THINNER BE USED OR STORED IN THE VICINITY OF THIS WATER HEATER, VENT-AIR INTAKE SYSTEM OR IN ANY LOCATION FROM WHICH FUMES COULD REACH THE WATER HEATER OR VENT-AIR INTAKE SYSTEM.**

TO FILL THE WATER HEATER

1. Close the water heater drain valve by turning the stem clockwise.
2. Open the cold water supply shut-off valve.
3. Open several hot water faucets to allow air to escape from the system.
4. When a steady stream of water flows from the faucets, the water heater is filled. Close the faucets and check for water leaks at the water heater drain valve, combination temperature and pressure relief valve and the hot and cold water connections.

TO DRAIN THE WATER HEATER

Should it become necessary to completely drain the water heater, make sure you follow the steps below:

1. Shut off the gas supply to the water heater.
2. Turn off/disconnect all electric power to the water heater.
3. Close the cold water supply shut-off valve.
4. Open the drain valve on the water heater by turning the stem counter-clockwise. The drain valve has threads on the end that will allow the connection of a standard hose coupling.
5. Open a hot water faucet to allow air to enter the system.

To refill the water heater, refer to “To Fill the Water Heater.”

Lighting and Shutdown instructions

FOR YOUR SAFETY READ BEFORE LIGHTING

WARNING: If you do not follow these instructions exactly, a fire or explosion may result causing property damage, personal injury or loss of life.

A. This appliance is equipped with an ignition device which automatically lights the pilot. Do not try to light the pilot by hand.

B. BEFORE OPERATING smell all around the appliance area for gas. Be sure to smell next to the floor because some gas is heavier than air and will settle to the floor.

WHAT TO DO IF YOU SMELL GAS

- Do not try to light any appliance.
- Do not touch any electrical switch; do not use any phone in your building.
- Immediately call your gas supplier from a neighbor's phone. Follow the gas supplier's instructions.
- If you cannot reach your gas supplier, call the fire department.

C. Use only your hand to slide the gas control switch. Never use tools. If the switch cannot be moved by hand, do not try to repair it, call a service technician. Force or attempted repair may result in a fire or explosion.

D. Do not use this appliance if any part has been under water. Immediately call a qualified service technician to inspect the appliance and to replace any part of the control system and any gas control which has been under water.

OPERATING INSTRUCTIONS

1. STOP! Read the safety information above.
2. Turn off all electric power to the appliance.
3. Set the thermostat to lowest setting.
4. This appliance is equipped with an ignition device which automatically lights the pilot. Do not try to light the pilot by hand.

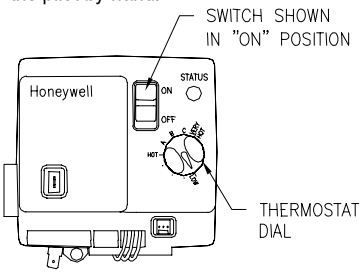

5. Slide the switch on the right side of the gas valve down to the "OFF" position
6. Wait five (5) minutes to clear out any gas. then smell for gas, including near the floor. If you smell gas, STOP! Follow "B" in the safety information above on this label. If you don't smell gas, go to the next step.
7. Slide the switch on the right side of the gas valve up to the "ON" position.
8. Set thermostat to desired setting.
9. Turn on all electric power to the appliance.
10. If the appliance will not operate, follow the instructions "To Turn Off Gas To Appliance" and call your service technician or gas supplier.

TO TURN OFF GAS TO APPLIANCE

1. Turn off all electric power to the appliance if service is to be performed.
2. Set the thermostat to the lowest setting.
3. Slide the switch on the right side of the gas valve down to the "OFF" position.

Thermostat Adjustment

The thermostat dial is adjusted to it's lowest setting when shipped from the factory. When adjusting the thermostat, it should be remembered that lower temperature settings are more energy efficient. To adjust the thermostat turn the dial clockwise until the minimum acceptable temperature is set. It is suggested that the starting point setting not exceed the 120°F *(49°C)* or "HOT" setting on the thermostat.

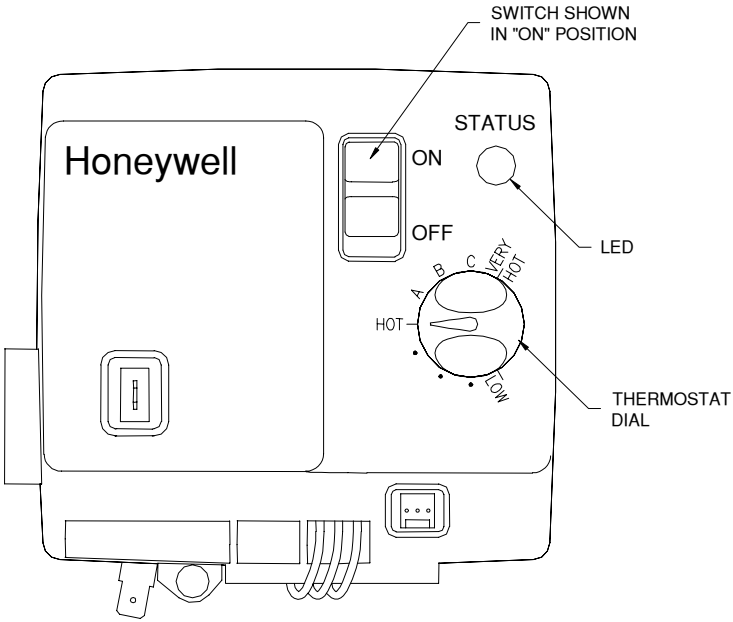

Figure 11

⚠ DANGER

Hotter water increases the risk of scald injury. Scalding may occur within five (5) seconds at a temperature setting of 140°F *(60°C)*. To protect against hot water injury, install an ASSE approved mixing valve in the water system. This valve will reduce point of discharge water temperatures by mixing cold and hot water in branch water lines. A licensed plumbing professional or local plumbing authority should be consulted.

Note: This water heater is equipped with an energy cut out device to prevent overheating. Should overheating occur, turn off the electrical supply to the water heater and contact a qualified service technician.

Burner Flame Check

Cast Iron Burner: At the time of installation and at periodic intervals (not more than 6 months), a visual check of the main burner and pilot flames should be made to determine if they are burning properly. For ideal operation, the gas and air must be properly proportioned. The proper air-gas mixture is obtained by adjusting the air shutter on the mixer face of the main burner *(See Figure 12).* To adjust for proper burning, loosen the air shutter nut (if provided), rotate shutter to close the opening in the burner then slowly rotate the shutter until the yellow tips disappear and the flame becomes blue. On 75 gallon models fired on LPG or propane, adjust the air shutter as described above until the yellow flame is minimized (note-the burner flame may contain a mixture of yellow and blue). Tighten the air shutter nut (if provided). Too much air will cause the flame to lift off the burner ports and create noisy operation. Too little air will result in soot formation. The main burner flame should light smoothly from the pilot.

Steel Burner: These models are equipped with self adjusting air mixture and do not have an adjustable air shutter (*See Figure* 12). At periodic intervals a visual check of the main burner and pilot flames should be made to determine if they are burning properly. The main burner flame should light smoothly from the pilot.

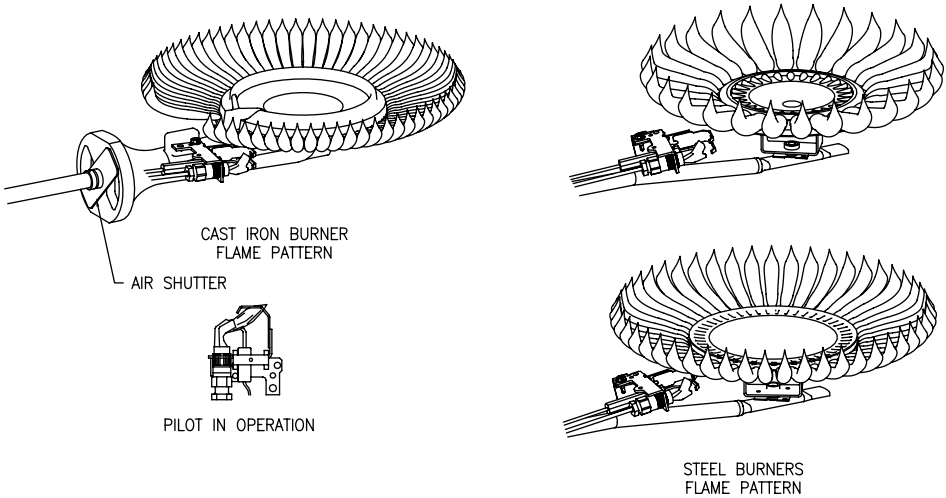

Figure 12

MAINTENANCE

⚠WARNING

Water heaters are heat producing appliances. To avoid damage or injury there must be no materials stored against the water heater or vent-air intake system, and proper care must be taken to avoid unnecessary contact (especially by children) with the water heater and vent-air intake system. **UNDER NO CIRCUMSTANCES MUST FLAMMABLE MATERIALS, SUCH AS GASOLINE OR PAINT THINNER BE USED OR STORED IN THE VICINITY OF THIS WATER HEATER, VENT-AIR INTAKE SYSTEM OR IN ANY LOCATION FROM WHICH FUMES COULD REACH THE WATER HEATER OR VENT-AIR INTAKE SYSTEM.**

IMPORTANT

The water heater should be inspected at a minimum annually by a qualified service technician for damaged components and/or joints not sealed. DO NOT operate this water heater if any part is found damaged or if any joint is found not sealed.

The following maintenance should be performed by a qualified service technician at the minimum periodic intervals suggested below. In some installations, the maintenance interval may be more frequent depending on the amount of use and the operating conditions of the water heater. Regular inspection and maintenance of the water heater and vent-air intake system will help to insure safe and reliable operation.

1. Annually check the operation of the thermostat.

2. The flow of combustion and ventilation air **MUST NOT** be restricted. Clear the combustion air openings of any dirt, dust, or other restrictions. **WARNING!** The ventilation air system may be **HOT**.

3. At all times keep the water heater area clear and free from combustible materials, gasoline and other flammable vapors and liquids.

4. Bi-annually conduct a visual check of the main and pilot burner flames to determine that they are burning properly. See Burner Flame Check section on page 36. If sooting or other burner anomalies are evident, shut down the water heater by turning off the gas per the instructions listed in this manual or as listed on the water heater.

5. Annually remove the inner door and main burner assembly to clean orifices and related parts of any dirt or other foreign material. Inspect the burner ports for obstructions or debris and clean with a wire brush as needed. Wire brush and/or vacuum clean the combustion chamber as needed to remove scale deposits and debris. **NOTE:** It is imperative for proper operation of the water heater that the inner door be replaced in the original location.

⚠ WARNING

- Do not block or in any way restrict jacket air inlet slots located at the bottom front of the water heater.
- Do not operate water heater with jumpered, altered, loosely tightened or absent controls and/or components.
- Do not operate water heater with replacement controls and/or components which are not exact duplicates of original equipment.
- Thoroughly inspect and replace, (as needed) burner inner door gasket and/or sight window gasket any time burner inner door is removed or disturbed.
- Replace water heater if involved in flammable vapor incident.
- This water heater is equipped with a flammable vapor sensor. If the sensor is exposed to flammable vapor, the water heater control will shut down the water heater and display a code of 7 flashes and then a 3 second pause.
- If a 7 flash error code is present, check to see if flammable vapor is present in the area. If flammable vapor is present or suspected in the area, immediately leave the area and contact a service professional.
  - Do not try to light any appliance.
  - Do not touch any electric switch; do not use any phone in your building.
- If you are certain there is no flammable vapor present, check the flammable vapor sensor to make certain it has not become disconnected from the control.
- See the instruction manual for troubleshooting.

⚠WARNING

When lifting lever of the combination temperature and pressure relief valve, hot water will be released under pressure. Be careful that any released water does not result in bodily injury or property damage.

6. At least once a year, check the combination temperature and pressure relief valve to insure that the valve has not become encrusted with lime. Lift the lever at the top of the valve several times until the valve seats properly without leaking and operates freely.

7. Monthly drain off a gallon of water to remove silt and sediment.

   ⚠WARNING! THIS WATER MAY BE HOT.

8. If the combination temperature and pressure relief valve on the appliance discharges periodically, this may be due to thermal expansion in a closed water supply system. Contact the water supplier or local plumbing inspector on how to correct this situation. **Do not plug the combination temperature and pressure relief valve outlet.**

9. A combination sacrificial anode rod/hot water outlet nipple has been installed to extend tank life. The anode rod should be inspected periodically (every 2 years) and replaced when necessary to prolong tank life. Water conditions in your area will influence the time interval for inspection and replacement of the anode rod. Contact the plumbing professional who installed the water heater or the manufacturer listed on the rating plate for anode replacement information. The use of a water softener may increase the speed of anode consumption. More frequent inspection of the anode is needed when using softened (or phosphate treated) water.

10. The blower has sealed motor bearings and does <u>not</u> require adding oil.

⚠CAUTION

FOR YOUR SAFETY. **DO NOT** ATTEMPT REPAIR OF COMBINATION GAS CONTROL, BURNERS OR GAS PIPING. REFER REPAIRS TO A QUALIFIED SERVICE TECHNICIAN.

Contact your supplier or plumbing professional for replacement parts or contact the company at the address given on the rating plate of the water heater.

Provide the part name, model and serial numbers of the water heater when ordering parts.

READ THE WARRANTY FOR A FULL EXPLANATION OF THE LENGTH OF TIME THAT PARTS AND THE WATER HEATER ARE WARRANTED.

Manufactured under one or more of the following U.S. Patents: RE.34,534; B1 5,341,770; 4,416,222; 4,628,184; 4,669,448; 4,672,919; 4,808,356; 4,829,983; 4,861,968; 4,904,428; 5,000,893; 5,023,031; 5,052,346; 5,081,696; 5,092,519; 5,115,767; 5,199,385; 5,277,171; 5,372,185; 5,485,879; 5,574,822; 5,596,952; 5,660,165; 5,682,666; 5,761,379; 5,943,984; 5,954,492; 5,988,117; 6,142,216; 6,684,821; 7,063,132;
Other U.S. and Foreign patent applications pending. Current Canadian Patents: 1,272,914; 1,280,043; 1,289,832; 2,045,862; 2,092,105; 2,107,012; 2,108,186; 2,112,515

Complete the following information and retain for future reference:

Model No:_____

Serial No:_____

Service Phone
Days:_____ Nights:_____

Address:_____

Supplier:_____

Supplier Phone No:_____

TROUBLESHOOTING

LED Status	Control Status	Probable Cause
None (LED not on or flashing)	Electrical power not present.	Control power switch in “OFF” position. Supply voltage interuppted.
One short flash every four seconds	Stand-by mode, Thermostat is satisfied (no faults).	Temperature demand is satisfied (no call for heat).
Alternates bright and dim (Heartbeat)	Thermostat calling for heat (no fault).	Tank temperature below set point of thermostat.
Short flash once every second	Weak pilot signal on last call for heat.	1. Unstable pilot. 2. Pilot tube block or restricted. 3. Oxidation build up on pilot electrode. 4. Wire damage to pilot assembly or bad connection at gas valve.
Two flashes, three second pause	Pressure switch not working-closed position.	1. Pressure switch tubing kinked or blocked. 2. Blocked pressure tap on switch. 3. Faulty pressure switch.
Three flashes, three second pause	Pressure switch or blower temperature switch not working - open position.	1. Vent blockage or improper vent configuration. 2. Pressure switch tubing kinked or blocked. 3. Blower not spinning up to speed. 4. Vent temperature too high 5. Faulty pressure switch or vent limit switch.
Four flashes, three second pause	Excessive tank temperature. System must be reset.	1. Thermowell sensor out of calibration. 2. Faulty gas valve.
Five flashes, three second pause	False pilot flame present.	1. Pilot valve stuck in open position.
Six flashes-one flash, three second pause (Soft lockout)	Failed to light pilot. System auto resets after 5 minutes.	1. Unstable pilot. 2. Pilot tube blocked or restricted. 3. Oxidation build up on pilot electrode. 4. Wire damage to pilot assembly or bad connection at gas valve.
Six flashes-two flashes, three second pause (Soft lockout)	Pressure switch or blower temperature switch opened during burner operation. System auto resets after 5 minutes.	1. Pressure switch tubing kinked or blocked. 2. Vent blockage or improper vent configuration. 3. Vent termination being affected by windy conditions. 4. Blower not spinning up to speed. 5. Vent temperature too high 6. Faulty pressure switch or blower temp. switch.

Troubleshooting continued-

LED Status	Control Status	Probable Cause
Six flashes-three flashes, three second pause (Soft lockout)	Pilot flame extinguished. System resets after 5 minutes.	1. Unstable pilot. 2. Pilot tube blocked or restricted. 3. Oxidation build up on pilot electrode. 4. Wire damage to pilot assembly or bad connection at gas valve. 5. Insufficient combustion air.
Six flashes-four flashes, three second pause	Undesired-false pilot flame sensed. System auto resets.	Pilot valve stuck in open position.
Seven flashes, three second pause	Flammable vapor sensor fault detected, see warning label	1. Flammable vapor present 2. Flammable vapor sensor exposed to excessive moisture 3. Flammable vapor sensor exposed to extreme ambient temp
Eight flashes-one flash, three second pause	Flammable vapor sensor out of specification. Possible short.	1. Flammable vapor sensor out of specification 2. Possible short
Eight flashes-three flashes, three second pause	T'stat well & sensor damaged or unplugged or Gas valve electronics fault detected	1. Damage to thermowell wire. 2. Thermowell sensor resistance out of range. 3. Replace thermowell. 4. Verify control is not wet or physically damaged 5. Reset control on/off switch. 6. Replace electronic module if 8-3 error persists
Eight flashes-four flashes, three second pause	Gas valve fault detected.	1. Verify control is not wet or physically damaged 2. Reset control on/off switch. 3. Replace gas control if 8-4 error persists

Control Sequence of Operation

Start up Sequence

Upon powering up, the control checks for the presence of the vapor sensor, if the resistance is in the expected range the control will begin normal operation after 5 to 8 seconds.

Normal Heating Sequence

1. The thermostat senses a need for heat.
2. The control checks the pressure switch condition.
3. If the pressure switch is open, the control sends power to the blower motor.
4. The blower starts moving combustion air through the combustion system.
5. The pressure switch closes.
6. The control senses the closed pressure switch and starts the ignition process by providing a spark at the pilot electrode and allowing gas to flow to the pilot.
7. When the pilot is lit the gas control senses the pilot flame and opens the main gas valve.
8. The main burner is lit.
9. The main burner and blower continue to operate until the thermostat is satisfied.
10. When the thermostat is satisfied the main and pilot gas valves close.
11. The blower operates for a short post purge period before shutting down.
12. The water heater remains in the stand-by mode until the next call for heat.

PARTS LIST DRAWING

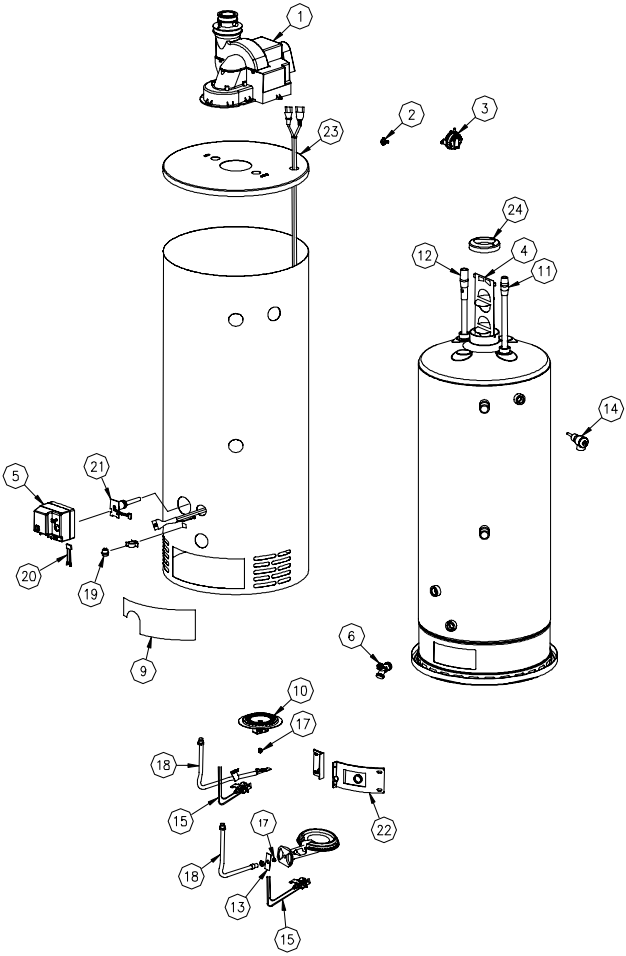

PARTS LIST

PART NAME AND DESCRIPTION	
1. Blower Assembly	13. Air Shutter (Cast Iron Only)
2. Temp. Switch	14. T&P Relief Valve Opening
3. Pressure Switch	15. Pilot Assembly
4. Flue Baffle	16. Cast Iron Burner
5. Honeywell Gas Control Valve	17. Main Burner Orifice
6. Drain Valve	18. Gas Feedline
7. Fiberglass Insulation (not shown)	19. Flammable Vapors Sensor
8. Foam Insulation (not shown)	20. Sensor Harness
9. Outer Door	21. Thermal Well
10. Steel Burner	22. Inner Door Assembly
11. Diptube–Nipple	23. Blower Harness
12. Anode–Nipple	24. Adapter

THE FOLLOWING INSTRUCTIONS ARE FOR INSTALLATION OF: GAS WATER HEATERS SUITABLE FOR WATER (POTABLE) HEATING AND SPACE HEATING

1. All piping components connected to this water heater for space heating applications must be suitable for use with potable water. In Massachusetts, space heating piping length **must not** exceed 50 feet.
2. Toxic chemicals, such as those used for boiler treatment, **must not** be introduced into potable water used for space heating.
3. This water heater **must not** be connected to an existing heating system or component(s) previously used with a non-potable water heating appliance.
4. When the system requires water for space heating at temperatures higher than required for other means, such as an ASSE approved mixing valve must be installed to temper the water for those uses in order to reduce the scald hazard potential.

Please refer to the illustrations below for the suggested piping arrangement.

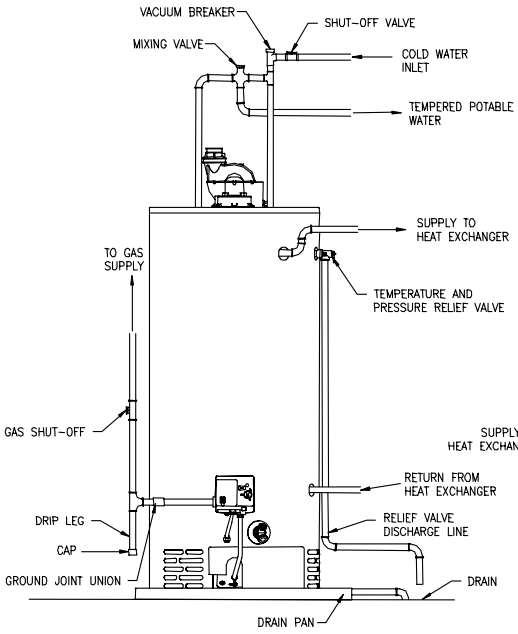

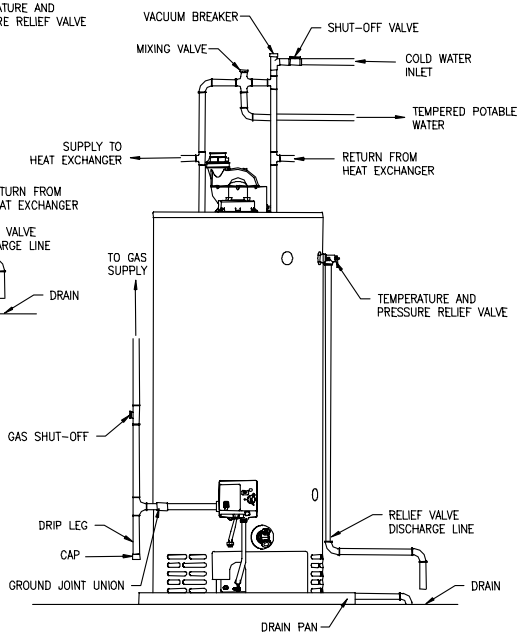

BRADFORD WHITE®

WATER HEATERS

TTW® Series

Through-The-Wall Gas Water Heaters

SERVICE MANUAL

Troubleshooting Guide
and Instructions for Service

(To be performed ONLY by
qualified service providers)

Models Covered by This Manual:

M1TW40S*F (BN,CX,SX)
M1TW50S*F (BN,CX,SX)
M1TW60T*F (BN,CX,SX)

M4TW40T*F (BN,SX)
M4TW50T*F (BN,SX)
M4TW60T*F (BN,SX)

M2TW50T*F (BN,CX,SX)
M2TW65T*F (BN,CX,SX)

TW450S65F (B,C,S)*(N,X)
TW465S65F (B,C,S)*(N,X)
(*) Denotes Warranty Years

DEFENDER SAFETY SYSTEM®

Manual 238-46238A-00A

Save this manual for future reference

The Bradford White

TTW® Series

Through-The-Wall Gas Water Heaters

Table of Contents

	Page	TTW Service Procedure
Introduction	4	- - -
How to use this manual	5	- - -
Tool required for service	5	- - -
Specifications	6	- - -
Control Timings	9	- - -
Sequence of Operation	10	- - -
Troubleshooting	13	- - -
Burner Inspection, Cleaning and Replacement	15	I
Pilot Testing, Cleaning and Replacement	17	II
Pressure Switch Testing and Replacement	18	III
Blower Testing and Replacement	20	IV
Blower Temperature Switch Testing and Replacement	22	V
Gas Control & Thermal well Testing & Replacement	24	VI
Flammable Vapor Sensor Testing and Replacement	28	VII
Safety Circuit Voltage Trace	29	VIII
115VAC Circuit Trace	30	IX
Dip Tube inspection and Replacement	31	X
Anode Inspection and Replacement	32	XI
Flue Baffle Inspection and Replacement	33	XII
Inner Door Removal, Inspection & Replacement	34	XIII
ScreenLok® Flame Arrestor Cleaning	37	XIV
Glossary of Terms	38	- - -
Parts List	39	- - -

BRADFORD WHITE® WATER HEATERS

WARNING: If the information in these instructions is not followed exactly, a fire or explosion may result causing property damage, personal injury, or death.

FOR YOUR SAFETY

Do not store or use gasoline or other flammable, combustible, or corrosive vapors and liquids in the vicinity of this or any other appliance.

WHAT TO DO IF YOU SMELL GAS

Do not try to light any appliance.

Do not touch any electrical switch; do not use any phone in your building.

Immediately call your gas supplier from a neighbor's phone. Follow the gas supplier's instructions.

If you cannot reach your gas supplier, call the fire department.

Installation and service must be performed by a qualified installer, service agency or the gas supplier.

⚠ CAUTION

Incorrect operation of this appliance may create a hazard to life and property and will nullify the warranty.

⚠ DANGER

Do not store or use gasoline or other flammable, combustible, or corrosive vapors and liquids in the vicinity of this or any other appliance.

IMPORTANT

Before proceeding, please inspect the water heater and its components for possible damage. DO NOT install any water heater with damaged components. If damage is evident then please contact the supplier where the water heater was purchased or the manufacturer listed on the rating plate for replacement parts.

⚠ WARNING

Water heaters are heat producing appliances. To avoid damage or injury, do not store materials against the water heater or vent-air intake system. Use proper care to avoid unnecessary contact (especially by children) with the water heater and vent-air intake components. UNDER NO CIRCUMSTANCES MUST FLAMMABLE MATERIALS, SUCH AS GASOLINE OR PAINT THINNER BE USED OR STORED IN THE VICINITY OF THIS WATER HEATER, VENT-AIR INTAKE SYSTEM OR IN ANY LOCATION FROM WHICH FUMES COULD REACH THE WATER HEATER OR VENT-AIR INTAKE SYSTEM.

⚠ CAUTION

If sweat fittings are to be used DO NOT apply heat to the nipples on top of the water heater. Sweat the tubing to the adapter before fitting the adapter to the water connections. It is imperative that heat is not applied to the nipples containing a plastic liner.

⚠ WARNING

Hydrogen gas can be produced in an operating water heater that has not had water drawn from the tank for a long period of time (generally two weeks or more). Hydrogen gas is extremely flammable. To prevent the possibility of injury under these conditions, we recommend the hot water faucet to be open for several minutes at the kitchen sink before you use any electrical appliance which is connected to the hot water system. If hydrogen is present, there will be an unusual sound such as air escaping through the pipes as hot water begins to flow. Do not smoke or have open flame near the faucet at the time it is open.

⚠ WARNING

DO NOT ATTEMPT TO LIGHT ANY GAS APPLIANCE IF YOU ARE NOT CERTAIN OF THE FOLLOWING:

Liquefied petroleum gases/propane gas and natural gas have an odorant added by the gas supplier that aids in the detection of the gas.

Most people recognize this odor as a “sulfur” or “rotten egg” smell.

Other conditions, such as “odorant fade” can cause the odorant to diminish in intensity, or ”fade”, and not be as readily detectable.

If you have a diminished sense of smell, or are in any way unsure of the presence of gas, immediately contact your gas supplier from a neighbor's telephone.

Gas detectors are available. Contact your gas supplier, or plumbing professional, for more information.

⚠ WARNING

FAILURE TO INSTALL AND MAINTAIN A NEW, LISTED 3/4” X 3/4” TEMPERATURE AND PRESSURE RELIEF VALVE WILL RELEASE THE MANUFACTURER FROM ANY CLAIM THAT MIGHT RESULT FROM EXCESSIVE TEMPERATURE AND PRESSURES.

⚠ CAUTION

Turn off or disconnect the electrical power supply to the water heater before servicing. Label all wires prior to disconnection when servicing controls. Wiring errors can cause improper and dangerous operation. Verify proper operation after servicing.

Introduction

The new Bradford White TTW1, TTW2 & TW4 water heaters are designed to provide reliable performance with enhanced standard features. New design features include reliable spark to pilot ignition system, enhanced diagnostics, simplified servicing, significantly quiet operation and additional vent lengths.

Spark to Pilot Ignition System - employing the spark to pilot ignition system promotes reliable and consistent pilot and main burner ignitions to provide hot water on demand.

Integrated Immersion Thermostat/Gas Control Valve with LED - was developed for ease of troubleshooting by providing simple diagnostic codes to pinpoint an installation or component performance issue.

New Powerful Blower - will eliminate problems with difficult venting situations.

Quieter and Cooler Blower Operation - blower noise is significantly reduced for both interior and exterior environments. Cooler operation increases blower life by reducing bearing wear and noise.

Rugged Wiring Connections - receptacle type connections promote error free wiring.

Increased Vent Lengths - increased venting performance is achieved while maintaining Energy Factor & FHSR performance.

The TTW1 (M1TW), TTW2 (M2TW) & TW4 water heaters use a combustion system were flue gases are combined with dilution air to reduce the flue gas temperature in the blower. The diluted flue gases are evacuated to the exterior through low temperature vent materials. The gas control maintains water temperature, ignition sequence and regulates gas flow. A safety circuit consisting of a pressure switch and blower temperature switch verifies proper conditions exist for safe and reliable operation. If a situation outside of normal operating parameters exists, the gas control diagnostic LED will flash a code to positively identify an operational issue.

This service manual is designed to facilitate problem diagnosis and enhance service efficiency. To further promote quicker service times the new gas valve can be removed and replaced without draining the water heater. A special tool is required and will be provided with each gas valve kit shipped from our Service Parts department.

Please read the service manual completely before attempting service on this new series of power vent models.

It is intended for this manual to be used by qualified service personal for the primary purpose of troubleshooting and repair of the Bradford White TTW Series water heaters. Understanding the sequence of operation section of this manual will contribute greatly to troubleshooting the water heater.

The Honeywell WV4460E Electronic Gas Control will display error codes in the event of abnormal operation. Error codes are listed in the troubleshooting chart beginning on page 13 of this service manual. The troubleshooting chart will also indicate the probable cause for the error code and direct the service professional to a service procedure to properly diagnose the abnormal operation.

In some difficult to diagnose conditions, it may be necessary to isolate the heater from the vent system to determine the problem.

Contact the Bradford White technical support group immediately if diagnosis can not be made using the methods described in this service manual.

Tools Required for Service

Manometer:	A liquid “U” tube type or a digital (magna-helic) type can be used. This device is used to measure gas and/or air pressure and vacuum.
Multi-Meter:	A digital type is strongly recommended. This device is used to measure electrical values. The meter you select must have the capability to measure volts AC, volts DC, Amps, micro-amps and ohms.
Electronic Probes:	In some cases, standard multi-meter probes will damage or simply not be effective to obtain certain voltage and ohm reading. It will be necessary to have special electronic “pin” type multi-meter probes. These probes are available at most electronic wholesale outlets.
Thermometer:	Used to measure water temperature. An accurate thermometer is recommended.
Water Pressure Gage:	Used to measure water supply pressure. Also used to determine tank pressure by adapting to the drain valve of the heater.
Gas Control Service Tool:	BWC part number 239-45991-00. A specialized tool designed to remove the gas control from gas control thermal well. Available from your Bradford White parts supplier.
Various Hand Tools:	Pipe wrench, channel locks, open end wrenchs (3/8",7/16",½"), 12" crescent wrench, Allen wrench set, screw drivers (common & Phillips), ¼" nut driver, pliers (common & needle nose), socket set, side cutters wire cutters, wire strippers, wire crimpers, torpedo level, small shop vac, step ladder, and flashlight, 5 gallon pail.

Power supply	Dedicated 115VAC, 60 Hz, 15A
Gas Supply Pipe	Minimum 1/2" NPT (schedule 40 black iron pipe recommended)
Approved Gas Type	Natural or Propane. Unit must match gas type supplied.
Gas Pressure	5.0" W.C. min. for Nat gas, 11.0" W.C. min. for L.P. gas, 14.0" W.C. maximum (Nat. & L.P.)
Venting System	Power vent through the wall or vertical through the roof
Approved Vent Materials	PVC, CPVC or ABS
Minimum Clearance for Servicing	18" from top, 24" from front, 4" sides and rear.
Water Supply Pressure	150 PSI maximum allowable working pressure. Check local codes for supply pressure
Thermal well TCO Limit	Residential 188°F (87°C), Commercial 199°F (93°C)
Residential Temperature Set Point Range	60°F (16°C) to 160°F (71°C) (Approximate temperatures)
Commercial Temperature Set Point Range	80°F (27°C) to 180°F (82°C) (Approximate temperatures)
Blower Temperature Switch	Normally closed, opens @ 165°F (74°C), auto reset @ 130°F (54°C).
Pressure switch	TTW1 (M1TW) Models: Normally open, closes on vacuum increase @ -.68, opens on vacuum decrease @ -.65 TTW1 (M4TW) Models: Normally open, closes on vacuum increase @ -.83, opens on vacuum decrease @ -.80 TTW2 (M2TW & TW4) Models: Normally open, closes on vacuum increase @ -1.28, opens on vacuum decrease @ -1.25
Blower	TTW1 (M1TW & M4TW) Models: 115VAC, 60Hz, 3.1 amps, 3000 RPM, 42CFM@1.5" W.C. TTW2 (M2TW & TW4) Models: 115VAC, 60Hz, 3.1 amps, 3000 RPM, 68CFM@0.4" W.C.

Vent Tables

Venting Specifications for:

40 Gallon
50 Gallon
60 Gallon

2" Diameter (5.1 cm) PVC Vent Connector Lengths			
Terminating	# of Elbows	Maximum Straight Length ft (m)	Minimum Straight Length ft (m)
Through the Wall	1	45 (13.7)	2 (.6)
Through the Wall	2	40 (12.2)	2 (.6)
Through the Wall	3	35 (10.7)	2 (.6)
Through the Wall	4	30 (9.2)	2 (.6)
Through the Roof	0	50 (15.2)	7 (2.1)
Through the Roof	1	45 (13.7)	7 (2.1)
Through the Roof	2	40 (12.2)	7 (2.1)
Through the Roof	3	35 (10.7)	7 (2.1)
Through the Roof	4	30 (9.2)	7 (2.1)

3" Diameter (7.6 cm) PVC Vent Connector Lengths			
Terminating	# of Elbows	Maximum Straight Length ft (m)	Minimum Straight Length ft (m)
Through the Wall	1	115 (35.0)	10 (3.1)
Through the Wall	2	110 (33.5)	10 (3.1)
Through the Wall	3	105 (32.0)	10 (3.1)
Through the Wall	4	100 (30.5)	10 (3.1)
Through the Wall	5	95 (29.0)	10 (3.1)
Through the Roof	0	120 (36.6)	15 (4.6)
Through the Roof	1	115 (35.0)	15 (4.6)
Through the Roof	2	110 (33.5)	15 (4.6)
Through the Roof	3	105 (32.0)	15 (4.6)
Through the Roof	4	100 (30.5)	18 (5.5)

Vent Tables

Venting Specifications for:

48 Gallon
65 Gallon

3" Diameter (7.6 cm) PVC Vent Connector Lengths			
Terminating	# of Elbows	Maximum Straight Length ft (m)	Minimum Straight Length ft (m)
Through the Wall	1	55 (16.8)	2 (.6)
Through the Wall	2	50 (15.2)	2 (.6)
Through the Wall	3	45 (13.7)	2 (.6)
Through the Wall	4	40 (12.2)	2 (.6)
Through the Roof	0	60 (18.3)	7 (2.1)
Through the Roof	1	55 (16.8)	7 (2.1)
Through the Roof	2	50 (15.2)	7 (2.1)
Through the Roof	3	45 (13.7)	7 (2.1)

4" Diameter (10.2 cm) PVC Vent Connector Lengths			
Terminating	# of Elbows	Maximum Straight Length ft (m)	Minimum Straight Length ft (m)
Through the Wall	1	175 (53.3)	10 (3.1)
Through the Wall	2	170 (51.8)	10 (3.1)
Through the Wall	3	165 (50.3)	10 (3.1)
Through the Wall	4	160 (48.8)	10 (3.1)
Through the Wall	5	155 (47.2)	12 (3.6)
Through the Roof	0	180 (54.9)	15 (4.6)
Through the Roof	1	175 (53.3)	15 (4.6)
Through the Roof	2	170 (51.8)	15 (4.6)
Through the Roof	3	165 (50.3)	15 (4.6)
Through the Roof	4	160 (48.8)	15 (4.6)

Control Timings

Ignition State	Timing
Pre-purge	2 Seconds
Trial for Ignition	90 Seconds
Flame Stabilization Period	3 Seconds
Inter-purge	15 Seconds
Flame Failure Response Time	1.5 Seconds (2 second. Maximum; 1 second minimum.)
Post-purge	15 Seconds
PS Fault Delay (failed open/close)	Retry after 2 Minutes
Soft Lockout	Retry after 5 Minutes
TCO Limit Lockout	Indefinite (See Page 24 to reset)
Verify Resistive Delay	Retry after 2 Minutes (repeats 5 times)
Simulated Resistive Load Lockout	Indefinite (cycle power to reset)
Hardware Error Lockout	Indefinite (self clears if fault clears for at least 15 seconds)

Wiring Diagram

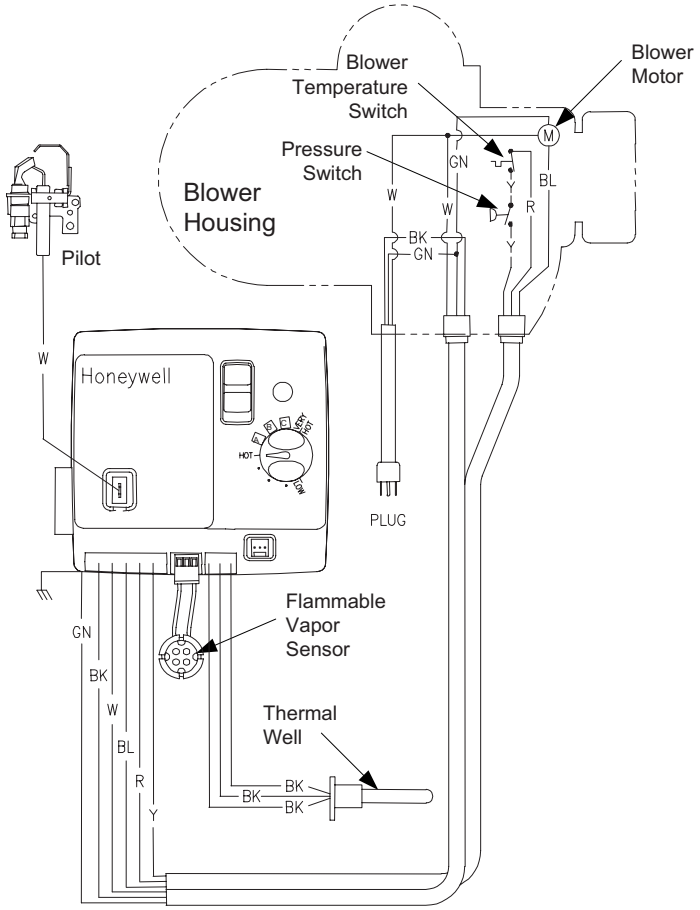

Power up Sequence

1 Start Up.

Upon power up, the control runs a safe-start check with a typical start-up delay of 5 seconds.

2 Flammable Vapor.

To assure no outputs are energized if the “Flammable Vapor Sensor” is out of range, the control will test the “Flammable Vapor Sensor” for proper operating range. If the “Flammable Vapor Sensor” is within range the control resumes normal operation with no perceptible delay. If the “Flammable Vapor Sensor” is out of range, the control LED immediately flashes *7 times* with 3 second pause.

Normal Heating Sequence

1 Thermostat calls for heat.

Prior to energizing blower, gas control checks safety circuit to insure the circuit is open. Normal switch positions in the safety circuit are as follows:

a) Pressure switch normally open.
b) Blower temperature switch normally closed.

If the safety circuit is closed, the control waits 4 seconds, gas control LED flashes *2 times* with 3 second pause. Gas control waits 2 minutes then, blower runs for 30 seconds. This cycle repeats until safety circuit opens.

2 Blower energizes.

3 Pressure switch proves blower/vent system operation.

If the pressure switch does not close within 30 seconds, the control LED Flashes *3 times* with 3 second pause. The blower runs for 30 seconds every 2 minutes trying to get the pressure switch or blower temperature switch to close. This cycle repeats as long as there is a call for heat.

4 Blower pre-purge period (2 seconds)

5 Trial for pilot ignition (90 seconds).

a) The gas control lights the pilot by activating spark igniter and gas flow to pilot burner.
b) If flame is not sensed within 90 seconds, igniter and gas flow are deactivated, blower will post purge and control LED flashes *6 times* with 3 second pause.

6 Main burner Ignition

After pilot flame is sensed, gas control activates main valve for main burner ignition. The gas control will ignore flame and pressure switch signals for 3 seconds allowing for main burner to stabilize.

Normal Heating Sequence (cont.)

7 Steady state operation.

During Steady State Operation the Control Monitors:

Thermostat temperature sensor- When set point temperature is satisfied, gas valve is shut down and blower will post purge for 15 seconds. Control LED flashes a short flash once every 4 seconds ***(idle)*** status code.

Pressure switch / Blower temperature switch- If either switch opens, pilot valve and main valve is shut down. The blower continues to runs for 30 seconds attempting to close the circuit. The control LED Flashes *3 times* with 3 second pause.

Flame Sensor- If flame is lost, pilot & main valve are shut down, blower runs for 15 seconds. Control attempts to re-light pilot 4 times. If unsuccessful, Blower is shut down and control proceeds to 5 minute lockout. Control re-attempts to light pilot starting at normal heating sequence #2.

8 Thermostat satisfies (Control LED flashing once every 4 seconds).

9 Burner off.

10 Blower post purge (15 seconds).

Abnormal Operation

1. Flammable Vapor Sensor Fault:

a) If the resistance is greater than 70,000 Ohms - the gas control immediately turns off all outputs. Control waits and monitors resistance for 30 seconds. If the resistance is greater than 65,000 ohms after 30 seconds, the gas control proceeds to verify resistive delay for 2 minutes and flashes *7 times then once* with a three second pause. This process is repeated 5 times until the control either returns to normal operation or proceeds to flammable vapor lockout.

b) **If the resistance is below 3000 ohms -** The gas control immediately turns off all outputs and proceeds to flash *8 times then once* with three second pause. The error self clears if the resistance returns to normal range for at least 15 seconds.

2. Temperature Sensor Fault:

a) Temperature sensor detected open circuit - The gas control Immediately turns off all outputs and proceeds to flash *8 times then three times* with three second pause. The error self clears if the fault clears for at least 15 seconds.

b) **Thermal well sensors not reading the same temperature within ±5.5 °F -** The gas control Immediately turns off all outputs and proceeds to flash *8 times then three times* with three second pause. The error self clears if the fault clears for at least 15 seconds.

c) **Water temperature in excess of TCO (Temperature Cut Off) limit -** The gas control immediately turns off pilot main valve and proceeds to flash *4 times* with 3 second pause. Blower continues to run until gas control is reset. To reset control, rotate knob of temperature control to the minimum setting for at least 6 seconds before returning to desired temperature setting.

Abnormal Operation (cont.)

3. Pressure Switch/Blower Temperature Fault:

a) **Pressure switch closed at start of call for heat -** The gas control waits four seconds then, proceeds to flash *2 times* with 3 second pause. The control waits 2 minutes and then turns on blower for 30 seconds. The blower turns off after 30 seconds and the control waits for pressure switch to open. Any time the Pressure switch opens, the blower turns on (or stays on) and the control proceeds to waiting for pressure switch to close.

b) **Pressure switch or blower temperature switch failed to close -** The gas control runs the blower for 30 seconds waiting for the pressure switch and/or blower temperature switch to close. If either switch does not close in 30 seconds, the blower turns off and the control flashes *3 times* with 3 second pause. The gas control waits two minutes before turning on the blower for another 30 seconds to see the circuit close. This cycle repeats as long as there is a call for heat or until the circuit closes.

c) **Pressure switch or blower temperature switch opens during burner operation -** The gas control turns off the pilot and main valve, runs blower for 15 seconds (inter-purge) waiting for pressure switch and/or blower temperature switch to close. If either switch fails to close, the control proceeds as described in 3b above. If the circuit closes again by the end of the inter-purge, the recycle counter is incremented, if the recycle count has not reached its limit (4), another trial for ignition begins. If the recycle count has been reached, the gas control turns off the blower and flashes *6 times then 2 times* with 3 second pause. The gas control waits 5 minutes before repeating ignition sequence.

4. Trial For Ignition Fault:

a) **Pressure switch opens during trial -** The gas control turns off igniter and pilot valve. The gas control proceeds as described in 3b above. If the pressure switch closes within 30 seconds the gas control will continue with trial for ignition starting at blower pre-purge.

b) **Flame Not Sensed -** The gas control energizes the spark igniter attempting to light the pilot and prove flame. If flame is not sensed within 90 seconds, the igniter turns off, the pilot valve is closed and the gas control runs the blower through post purge and flashes *6 times then once* with 3 second pause. The control waits 5 minutes before repeating the ignition sequence.

5. Flame Sensing Fault:

b) **Flame lost during run -** The gas control turns off pilot and main valves, runs blower for 15 seconds (inter purge). The gas control increments the recycle count, if the recycle count has not reached its limit (4), another trial for ignition begins. If the recycle count has been reached, the gas control turns off the blower and flashes *6 times then 3 times* with 3 second pause. The gas control waits 5 minutes before repeating the ignition sequence.

c) **Flame sensed out of sequence -** the gas control only looks for pilot flame when the blower is running. If flame is present when the pilot valve is not open, the gas control proceeds to wait for flame loss and flashes *5 times* with 3 second pause. This continues until flame is lost, once the flame signal is lost, the control flashes *6 times then 4 times* with 3 second pause. The control waits 5 minutes before repeating the ignition sequence.

Observe green LED indicator on Electronic gas control. Error flash codes are displayed with a three second pause before repeating. Check and repair the system as noted in the troubleshooting table below.

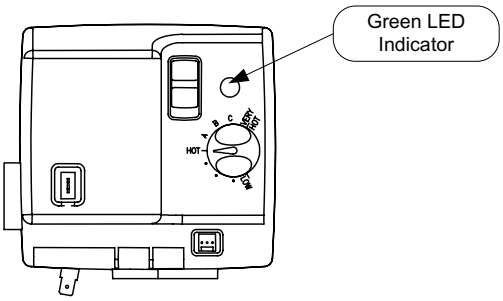

LED Status	Control Status	Probable Cause	Service Procedure
None, control LED not on or flashing	No electrical power	Control power switch in “OFF” position. Supply voltage interrupted.	Turn power on
Short flash, once every four seconds	Stand-by mode, Waiting for call for heat (no fault).	Temperature demand is satisfied	Normal operation. Adjust thermostat to temp level
“Heartbeat”, alternates bright/dim	Thermostat calling for heat (no fault).	Tank temperature below set point of thermostat.	Normal operation. Adjust thermostat to temp level
Short flash once per second	Weak pilot signal on last call for heat.	1. Unstable pilot. 2. Pilot tube block or restricted. 3. Oxidation build up on pilot electrode. 4. Wire damage to pilot assembly or bad connection at gas valve.	1. Page 15 2-4. Page 17
Two flash, three second pause	Pressure switch not working-closed position.	1. Pressure switch tubing kinked or blocked. 2. Blocked pressure tap on switch or blower. 3. Faulty pressure switch.	Page 18
Three flash, three second pause	Pressure switch or blower temp. switch not working -open position.	1. Vent blockage or improper vent configuration. 2. Pressure switch tubing kinked or blocked. 3. Faulty pressure switch. 4. Blower not spinning up to speed. 5. Blower temp or exhaust temp too high 6. Faulty blower temperature switch.	1. Check vent or vent tables. 2 & 3 Page 18 4. Page 20 5 & 6 Page 22
Four flash, three second pause	Excessive tank temperature. System must be reset. (See Pg. 24)	1. Thermal well sensor out of calibration. 2. Faulty gas control. 3. Pluming leak. 4. Tank not filled with water.	1. Page 24 2. Replace gas control, page 24
Five flash, three second pause	Undesired-false pilot flame present.	1. Pilot valve stuck in open position.	Replace gas control, page 24

LED Status	Control Status	Probable Cause	Service Procedure
Six-one flash, three second pause	Failed to light pilot. System auto resets.	1. Unstable pilot. 2. Pilot tube blocked or restricted. 3. Oxidation build up on pilot electrode. 4. Wire damage to pilot assembly or bad connection at gas valve.	1. Page 15 2-4. Page 17
Six-two flash, three second pause	Pressure switch or blower temp switch opened during burner operation. System auto resets.	1. Vent blockage or improper vent configuration. 2. Pressure switch tubing kinked or blocked. 3. Faulty pressure switch. 4. Vent termination being affected by wind 5. Blower not spinning up to speed. 6. Blower temp or exhaust temp too high 7. Faulty blower temperature switch.	1. Check vent or vent tables. 2 & 3 Page 18 4. Refer to venting section of installation manual 5. Page 20 6 & 7 Page 22
Six-three flash, three second pause	Pilot flame extinguished. System auto resets.	1. Unstable pilot. 2. Pilot tube blocked or restricted. 3. Oxidation build up on pilot electrode. 4. Wire damage to pilot assembly or bad connection at gas valve. 5. Insufficient combustion air. 6. Gas pressure is out of specification.	1. Page 15 2-4. Page 17 5. Refer to installation manual
Six-four flash, three second pause	Undesired-false pilot flame sensed. System auto resets.	Pilot valve stuck in open position.	Replace gas control, page 26
Seven flash, three second pause	Flammable Vapor Sensor fault detected.	**WARNING: EXPLOSION HAZARD** • Indicates gasoline vapors were detected at potentially explosive levels. • Verify no gasoline vapors are still present. • Reset the control by cycling power to the appliance or by cycling the ON/OFF switch. • Replace the Flammable Vapor Sensor element if a gasoline spill event occurred.	Page 28
Eight-one flash, three second paus	Flammable Vapor Sensor out of specification.	• Very Flammable Vapor Sensor (FVS) resistance is not below 25 KΩ. • Check wiring to FVS and insure it is not shorted. • Replace control if everything above checks out OK.	Page 28
Eight-three flash, three second pause	Thermal well sensor damaged or unplugged	1. Damage to thermal well wire. 2. Thermal well sensor resistance out of range.	Page 24
Eight-four flash, three second pause	Gas valve fault detected.	1. Control needs to be reset. 2. Control is wet or physically damaged.	1. Interrupt power supply 2. Replace gas control, page 26

Burner Inspection and Air Shutter Adjustment.

At periodic intervals (every 6 months) a visual inspection should be made of the pilot and main burner for proper operation and to assure no debris is accumulating.

Pilot flame should be stable, some causes for an unstable pilot flame are:

a) Water heater vent is less than the allowable vent length.
b) Gas pressure is out of specification.
c) Pilot flame not fully engulfing spark/flame sensor.

Main burner should light smoothly from pilot and burn with a blue flame with a minimum of yellow tips.

Steel burner models self adjust air to gas ratio mixture and do not have an adjustable air shutter. Cast iron burner can have the gas and air mixture properly proportioned by adjusting the air shutter on the mixer face of the main burner (see cast iron burner adjustment below).

Main burner must be free from any debris accumulation that may effect burner operation (see burner cleaning procedure on page 16).

Cast Iron Burner Air Shutter Adjustment

⚠ WARNING
Inner door and burner components may be HOT when performing this operation. Take necessary precaution to prevent personal injury.

Step 1. With main burner in operation, remove outer jacket door and inner door per service procedure XIII on page 34.

Step 2. To adjust for proper burning, loosen the air shutter nut, rotate the air shutter to close the opening in the burner, then slowly rotate the air shutter open until flame becomes as blue as possible with a minimum of yellow tips. Tighten the air shutter nut.

Too much air will cause the flame to lift off the burner ports and create noisy burner operation.
Too little air will result in soot formation.

Step 3. Reinstall inner door and observe burner operation. Burner should operate as adjusted in step 2. If not, repeat air shutter adjustment compensating for proper burner operation with inner door closed.

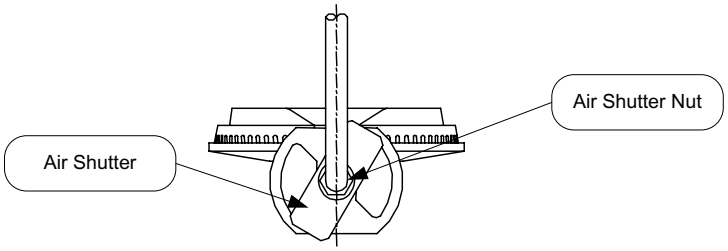

Burner Cleaning

Step 1. Position gas control power switch to the "OFF" position and unplug heater from wall outlet.

Step 2. Turn off gas supply to water heater.

Step 3. Remove outer jacket door and inner door per service procedure XIII on Page 34.

Step 4. Disconnect pilot tube (7/16 wrench) and feedline (¾ wrench) from gas control.

Step 5. Disconnect igniter/flame sensor wire from gas control.

Step 6. Remove burner assembly from combustion chamber.

Step 7. Thoroughly inspect burner surface area and burner port area and remove any loose debris.

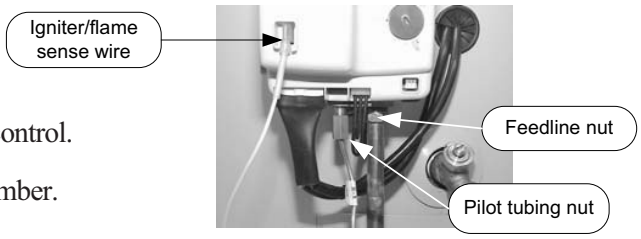

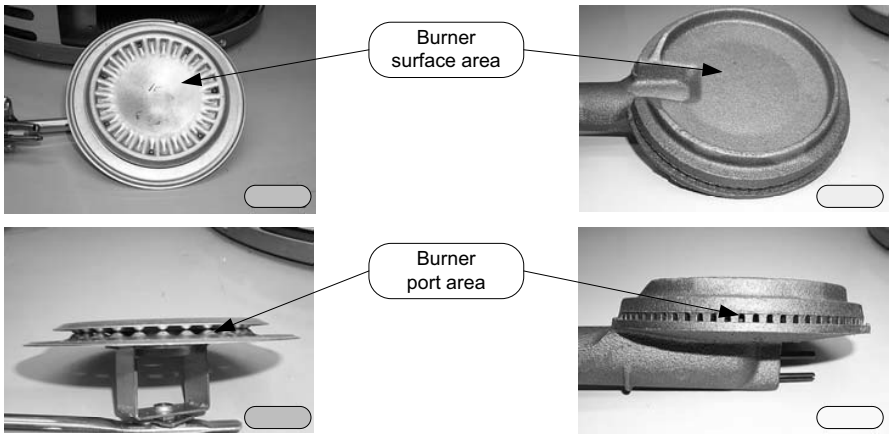

Step 9. Unscrew burner from main burner orifice. On cast iron burners, loosen air shutter nut and unscrew feedline from burner.

Step 10. Remove main burner orifice from feedline (½" wrench on steel burners, 3/8" wrench on cast iron) inspect orifice, clean or replace if necessary.

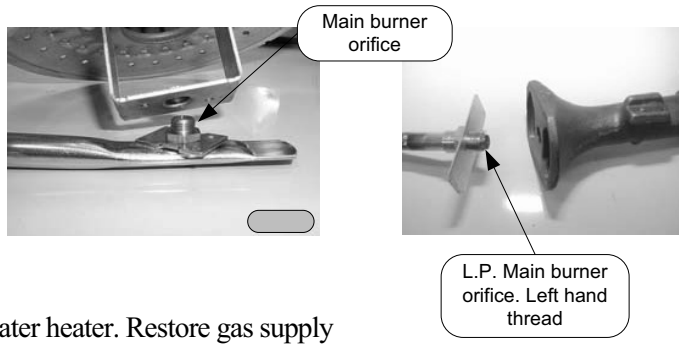

Step 11. Reassemble burner and reinstall into water heater. Restore gas supply and check for gas leaks.

Step 12 To resume operation follow the instruction located on the lighting instruction label or the lighting instruction located in the installation and operating manual.

Pilot Inspection, Testing and Replacement

Step 1. Position gas control power switch to the "OFF" position and unplug heater from wall outlet.

Step 2. Turn off gas supply to water heater.

Step 3. Remove outer jacket door and inner door per service procedure XIII on page 34.

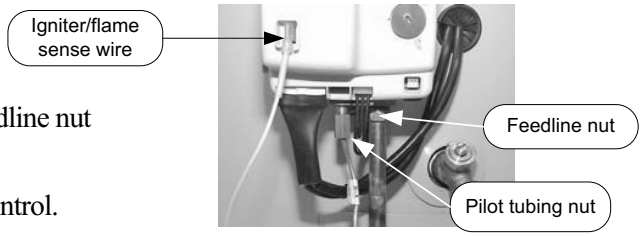

Step 4. Disconnect pilot tube nut (7/16 wrench) and feedline nut (¾ wrench) from gas control.

Step 5. Disconnect igniter/flame sense wire from gas control.

Step 6. Remove burner assembly from combustion chamber.

Step 7. Remove pilot assembly from feedline (¼" nut driver).

Step 8. Visually inspect igniter/flame sense wire for damage. Replace pilot if damage is found.

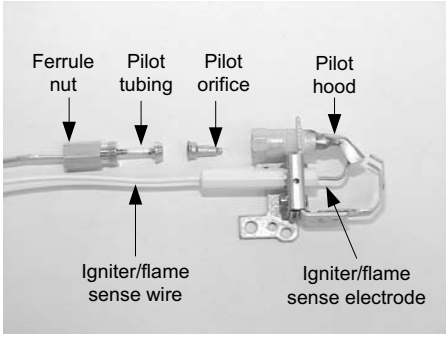

Step 9. With a multi-meter set to the ohms setting, check continuity through igniter/flame sense wire. Replace pilot if no continuity.

Step 10. Visually inspect igniter/flame sense electrode for deterioration. Replace pilot as necessary. Electrode should not be in contact with pilot hood, If so, carefully adjust electrode to a gap distance of 3/32" (.09) from pilot hood.

Step 11. Visually inspect igniter/flame sense electrode for oxidation build up. Carefully clean any oxidation using very fine emery cloth.

Step 12. Visually inspect pilot tubing for kinks or cracks. If damage is found replace pilot.

Step 13. Inspect pilot tubing and pilot orifice for blockage:
a) Remove ferrule nut from bottom of pilot assembly (7/16" wrench).
b) Remove pilot tube and pilot orifice.
c) Inspect pilot tubing and pilot orifice for blockage. Clean or replace as necessary.

Step 14. Reassemble pilot and install to feedline. Reinstall burner assembly to water heater. Restore gas supply and check for gas leaks.

Step 15 To resume operation follow the instruction located on the lighting instruction label or the lighting instruction located in the installation and operating manual.

Pressure Switch Testing

⚠ WARNING
115 volt potential exposure. Use caution making voltage checks to avoid personal injury.

Step 1. Position power switch on gas control to the "OFF" position.

Step 2. Remove the three screws (Phillips screw driver) from control access cover on blower assembly and remove cover (see photo 1).

Step 3. Carefully remove pressure switch from blower housing (see photo 2)

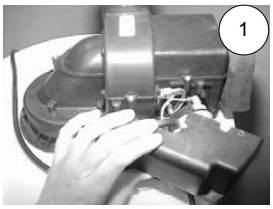

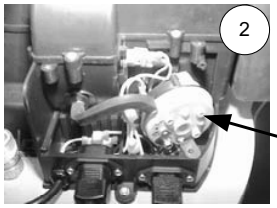

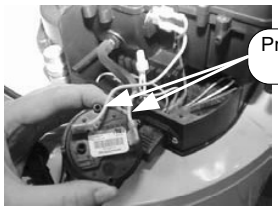

Slide pressure switch in direction of arrow while tilting slightly away from blower housing.

With steps 1,2 & 3 complete, disconnect wire leads from pressure switch.

Use a multi-meter set to the ohms setting. With blower off, check across pressure switch terminals. Are switch contacts open? (no electrical continuity)

N → Check tubing and pressure tap on switch for blockage. Is there blockage?

N → Replace switch (see page 19)

Y → Clear blockage

Y → Position gas valve power switch to the "ON" position and adjust thermostat to call for heat, this will start the blower. Check with multi-meter, do pressure switch contacts close with blower running?

N → Check tubing and pressure tap on switch for blockage. Is there blockage?

Y → Clear blockage

N → Is vent system blocked

Y → Clear blockage

N → Is vent system length within vent table specifications listed on pages 7 & 8

Y → See blower testing (page 20) Is blower OK?

Y → Replace switch (see page 19)

N → Correct blower problem.

N → Reconfigure vent system to be compliant with vent tables.

Y → Switch contacts are OK. See safety circuit trace (page 29)

Pressure Switch Replacement

⚠ WARNING
115 volt potential exposure. Use caution to avoid personal injury.

Step 1. Position gas control power switch to "OFF" position.

Step 2. Remove the three screws (Phillips screw driver) from control access cover on blower assembly and remove cover (see photo 3).

Step 3. Carefully remove pressure switch from blower housing (see photo 4)

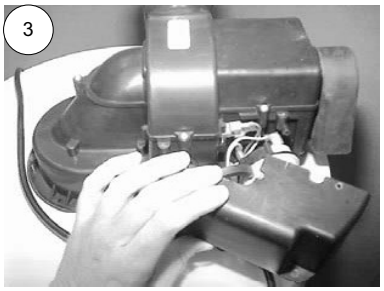

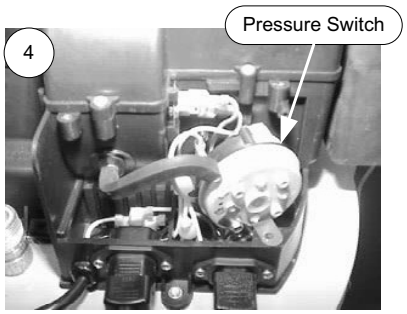

Slide pressure switch in direction of arrow while tilting slightly away from blower housing.

Step 4. Disconnect tubing from pressure switch. (see photo 5)

Step 5. Disconnect yellow wires from pressure switch (see photo 6)

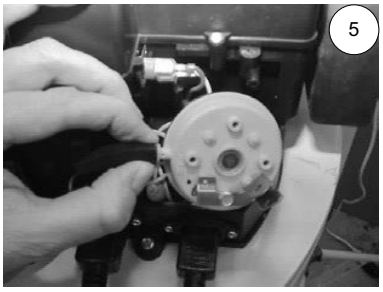

Step 6. Reconnect wires from step 5 to new pressure switch.

Step 7. Reconnect tubing to new pressure switch.

Step 8. Carefully position pressure switch into blower housing.

Step 9. Position gas control power switch to "ON" position and verify proper heater operation.

Step 10. Replace control access cover from step 2.

Blower Testing

⚠ WARNING
115 volt potential exposure. Use caution when making voltage checks to avoid personal injury.

Step 1. Position gas control power switch to "ON" position and adjust control to call for heat.

Step 2. Remove the three screws (Phillips Screw driver) from control access cover on blower assembly and remove cover (see photo 7).

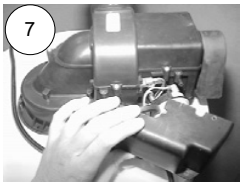

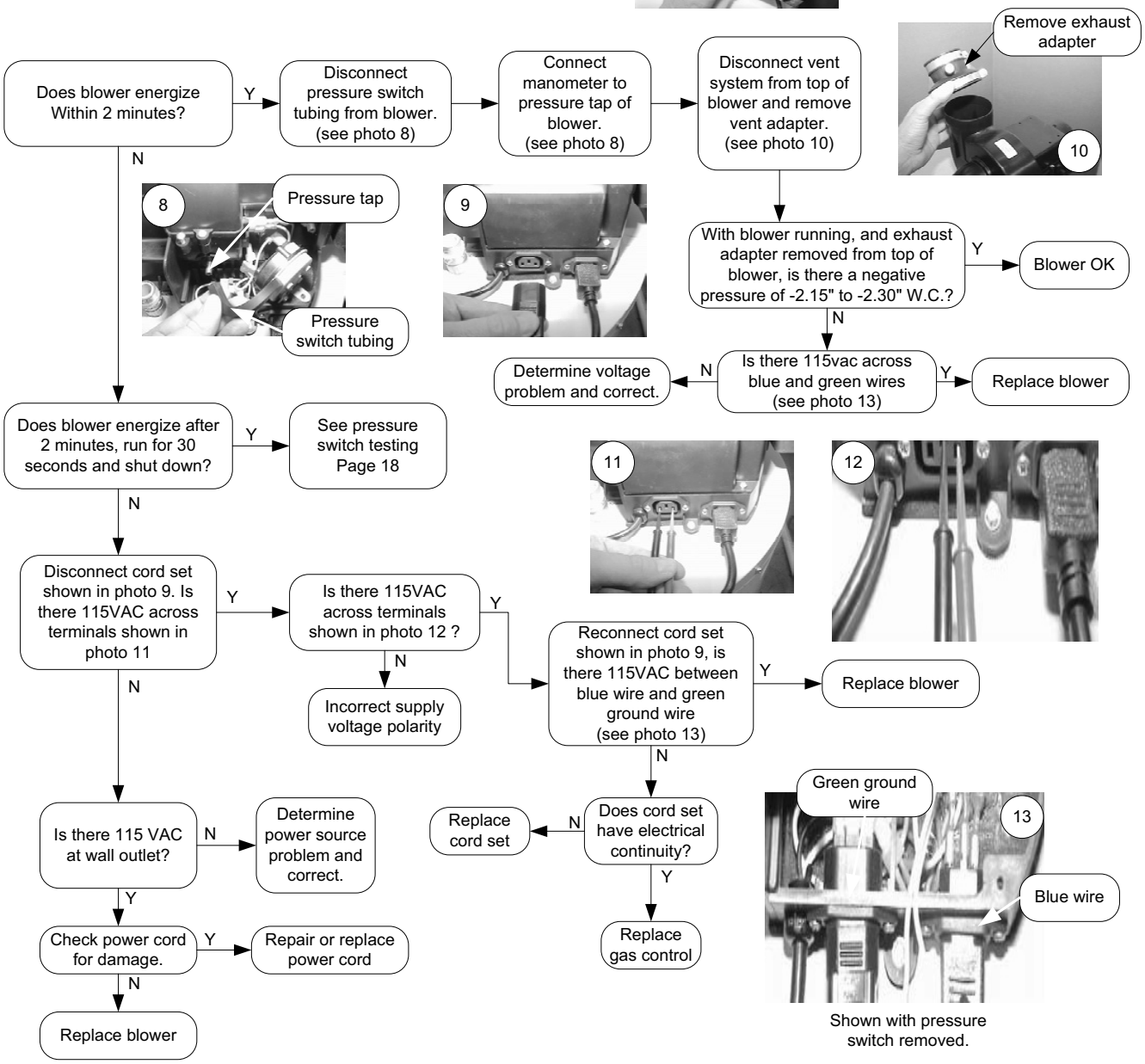

Shown with pressure switch removed.

Blower removal

Step 1. Position gas control power switch to the "OFF" position.

Step 2. Unplug blower power cord from wall outlet.

Step 3. Disconnect vent system from exhaust adapter on top of blower.

Step 4. Remove exhaust adapter from blower (blade screw driver) and retain for use on new blower

Step 5. Unplug cord sets from blower.

Step 6. Remove the three blower mounting screws (¼" nut driver).

Step 7. Remove blower with gasket from water heater.

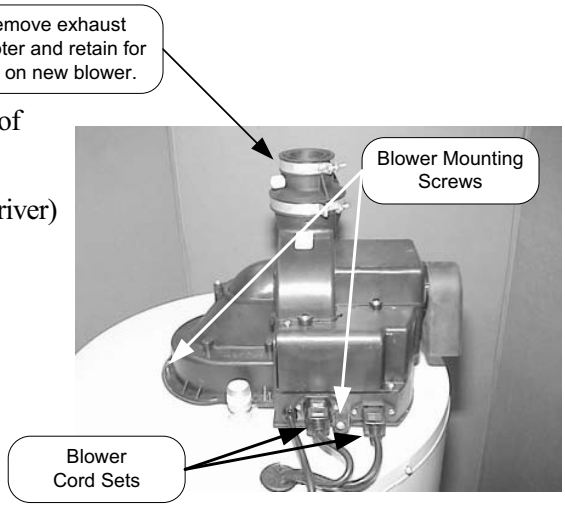

Blower Installation

Step 8. Clean any debris from jacket head of water heater.

Step 9. Set new blower with gasket in place using locating pins on blower flange to line up with location holes in jacket head. Be sure not to damage gasket.

Step 10 Secure blower in place using mounting screws from step 6.

Step 11. Re-install exhaust adapter from step 4.

Step 12. Reconnect vent system to exhaust adapter.

Step 13. Reconnect cord sets from step 5.

Step 14. Plug blower power cord into wall outlet.

Step 15. Position gas control power switch to the "ON" position.

Step 16. Verify proper blower operation.

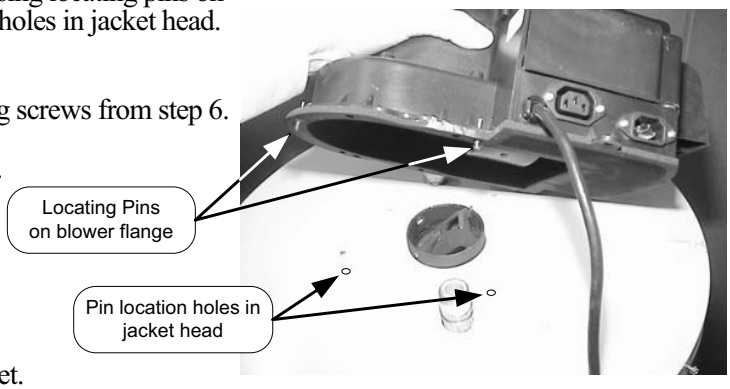

Blower Temperature Switch Testing.

⚠ WARNING
115 volt potential exposure. Use caution to avoid personal injury.

Step 1. Position power switch on gas control to the "OFF" position.

Step 2. Remove the three screws (Phillips screw driver) from control access cover on blower and remove cover (see photo 14).

Step 3. Locate blower temperature switch (see photo 15)

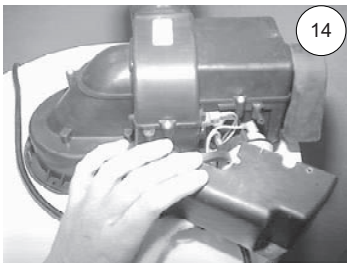

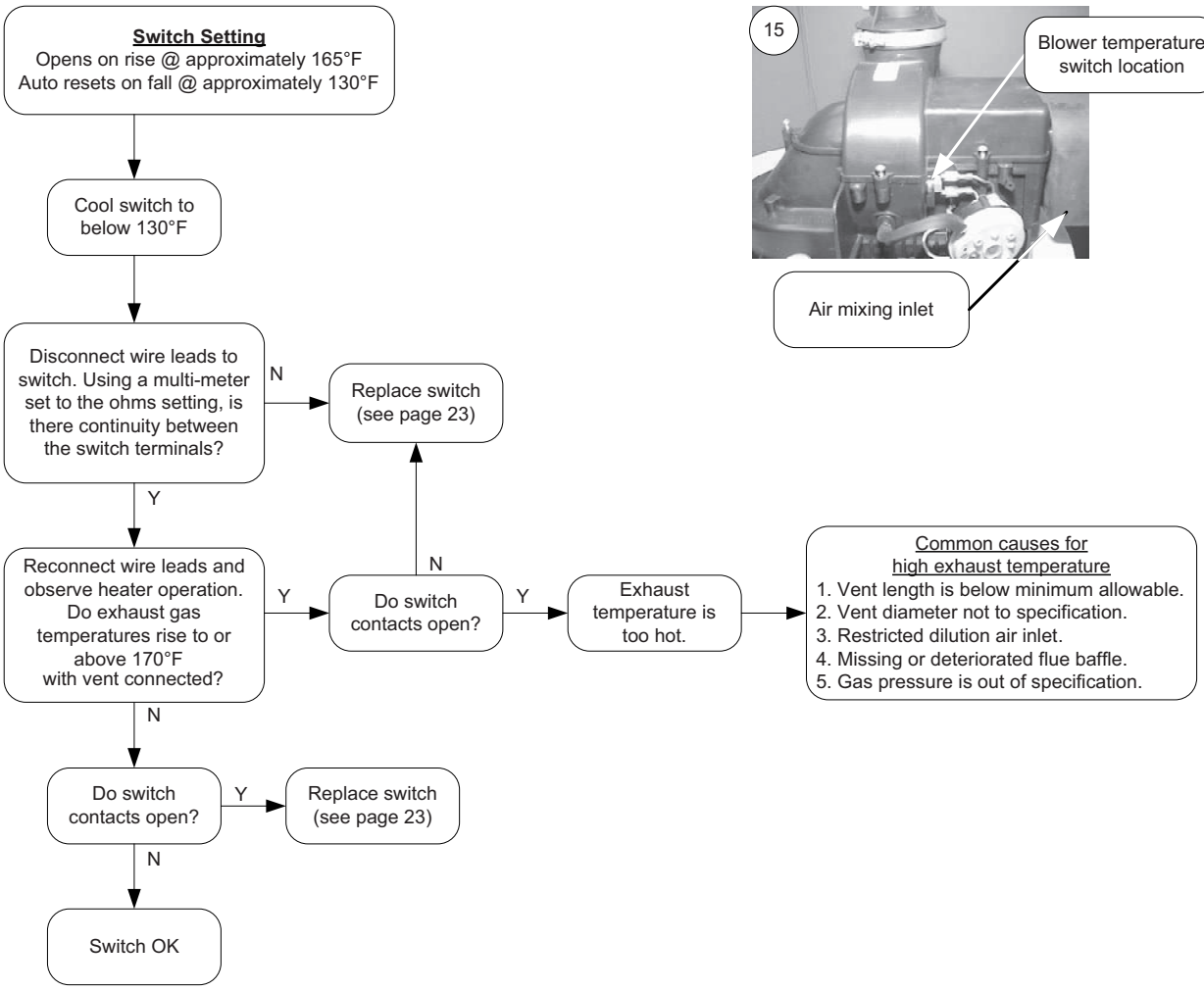

Blower Temperature Switch Replacement.

⚠ WARNING
115 volt potential exposure. Use caution to avoid personal injury.

Step 1. Position gas control power switch to the "OFF" position and unplug heater from wall outlet.

Step 2. Remove the three screws (Phillips screw driver) from the control access cover on blower and remove cover. (see photo 16)

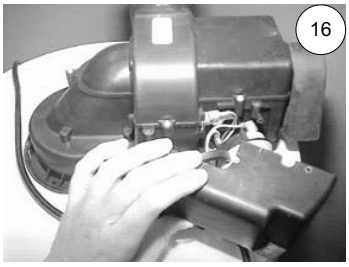

Step 3. Locate blower temperature switch (see photo 17)

Step 4. Disconnect red and yellow wire leads from switch.

Step 5. With an appropriate tool such as side cutters, snip the retaining lug from the blower housing to allow removal of temperature switch (see photo 18).

Step 6. Remove switch from blower housing.

Step 7. Install new switch. Be sure switch is properly seated in mounting area.

Step 8. Reconnect red and yellows wires to new switch. Wires are interchangeable with either terminal.

Step 9. Position gas control power switch to the "ON" position and verify proper heater operation.

Step 10. Replace control access cover from step 2.

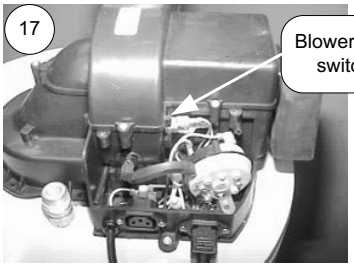

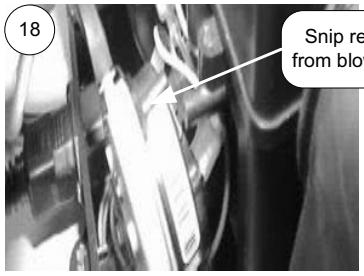

Gas Control Testing

See pages 29 & 30 for gas control voltage testing.

Thermal Well Testing

If Control has gone into TCO lockout due to excessive tank temperature (four flash, 3 second pause) reset control by rotating knob of temperature control to the minimum setting for at least 6 seconds before returning to desired temperature setting.

Observe heater operation. If control continues to lockout due to excessive tank temperature, proceed to thermal well testing to determine cause.

Thermal well testing
Position gas control power switch to the "OFF" position and disconnect thermal well harness from gas control.

Using a multi-meter set to the Ohms setting, determine the resistance of thermal well sensor (see caution photos 19 & 20)

Once the thermal well resistance values are known, the water temperature must also be known to determine if the resistance values are correct. See page 25 to obtain water temperature.

Are thermal well resistance values correct?

N → Replace thermal well (see page 26)

Y → Replace gas control (see page 26)

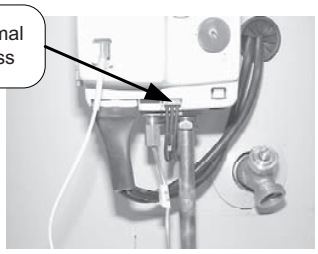

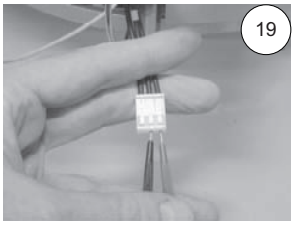

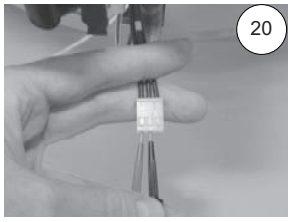

⚠ CAUTION
DO NOT use standard multimeter probes for this test. Doing so will damage connector. Use special pin type electronic probes or small diameter wire pins inserted into connector.

Using a multi-meter set to the ohms setting, insert one meter probe (see caution) into center wire position of thermal well connector, insert the second probe (see caution) into either of the outside wire positions (see photo 19).

Alternate the probe on the outside position to the opposite outside wire position (see photo 20).

⚠ WARNING
Stored water may be HOT when performing the following steps in this procedure.
Take necessary precaution to prevent personal injury.

Determine Water Temperature Inside Tank

Note: It is important to understand once the resistance for the thermal well is determined from page 24, water flow through the heater should not occur. Prior to performing the steps below, turn off the cold water supply to the water heater. This will prevent cold water flow into the tank affecting the resistance value of thermal well.

Step 1. Position gas control power switch to "OFF" position.

Step 2. Draw approximately 1 quart of water from drain valve into container and immediately measure water temperature using an accurate thermometer. It may be necessary to open a hot water faucet to allow heater to drain.

Step 3. Using the chart below, determine correct resistance value for the water temperature from step 2.

Example: If temperature of water is 84°F, then the resistance through the sensor would be 8449 (see shaded area). NOTE: Sensor resistance increases as the temperature falls.

Sensor Resistance at Various Temperatures

In Degrees F										
°F	0	1	2	3	4	5	6	7	8	9
40	26109	25400	24712	24045	23399	22771	22163	21573	21000	20445
50	19906	19383	18876	18383	17905	17440	16990	16553	16128	15715
60	15314	14925	14548	14180	13823	13477	13140	12812	12494	12185
70	11884	11592	11308	11032	10763	10502	10248	1000	9760	9526
80	9299	9078	8862	8653	8449	8250	8057	7869	7685	7507
90	7333	7165	7000	6839	6683	6531	6383	6238	6098	5961
100	5827	5697	5570	5446	5326	5208	5094	4982	4873	4767
110	4663	4562	4464	4368	4274	4183	4094	4006	3922	3839
120	3758	3679	3602	3527	3453	3382	3312	3244	3177	3112
130	3048	2986	2925	2866	2808	2752	2697	2643	2590	2538
140	2488	2439	2391	2344	2298	2253	2209	2166	2124	2083
150	2043	2004	1966	1928	1891	1856	1820	1786	1753	1720
160	1688	1656	1625	1595	1566	1537	1509	1481	1454	1427
170	1402	1376	1351	1327	1303	1280	1257	1235	1213	1191
180	1170	1150	1129	1110	1090	1071	1053	1035	1017	999
190	982	965	949	933	917	901	886	871	857	842
200	828	814	801	788	775	762	749	737	725	713

Gas Control & Thermal Well Removal From Water Heater

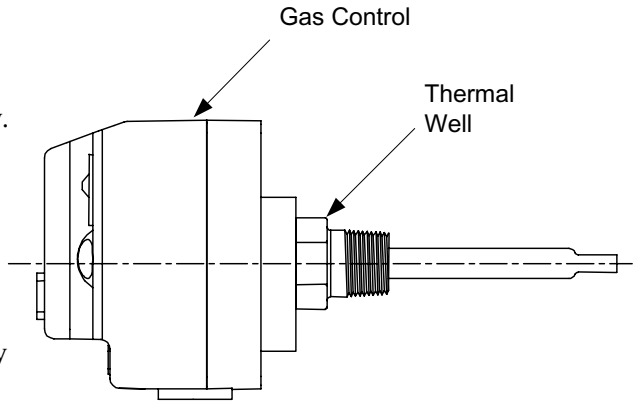

Step 1. Position gas valve power switch to the "OFF" position and Unplug Heater from power supply.

Step 2. Drain heater to a point below the gas control level.

Step 3. Turn off gas supply to water heater and disconnect gas piping from gas control.

Step 4. Disconnect wire harnesses and burner assembly from gas control.

Step 5. Remove gas control & thermal well by rotating flats of Thermal Well counter clockwise (1-5/16"wrench).

Gas Control Removal From Thermal Well

Follow the steps below allows removal gas control from thermal well without removing thermal well from tank.

Step 1. Position gas control power switch to the "OFF" position and unplug water heater from power supply.

Step 2. Turn off gas supply to water heater and disconnect gas piping from gas control.

Step 3. Disconnect wire harnesses & burner assembly from gas control.

Step 4. Using gas control service tool (239-45991-00) available from your BWC parts supplier, Insert tool into back of gas control (see photos below)

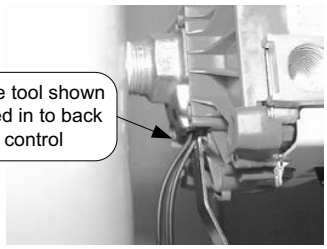

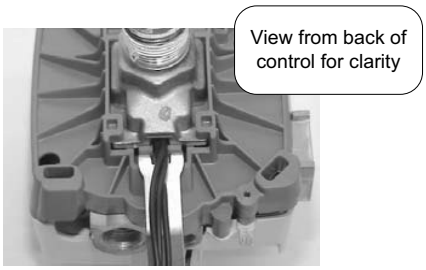

Step 5. Pivot tool towards heater as far as possible (see photo below). Lift straight up on gas control. The control should move about 1/8". At this point, remove tool not allowing the control to fall back. With tool removed, lift straight up on control to remove completely from Thermal Well.

Gas Control Assembly to Thermal Well

Step 1. Install threaded end of thermal well into tank. Be sure thermal well flange is positioned as shown in photo 24 for proper control alignment.

Step 2. Route wire leads back into relief opening. (see photo 24)

Step 3. Align slots located on thermal well flange with tabs located on back of gas control (see photos 24 & 25)

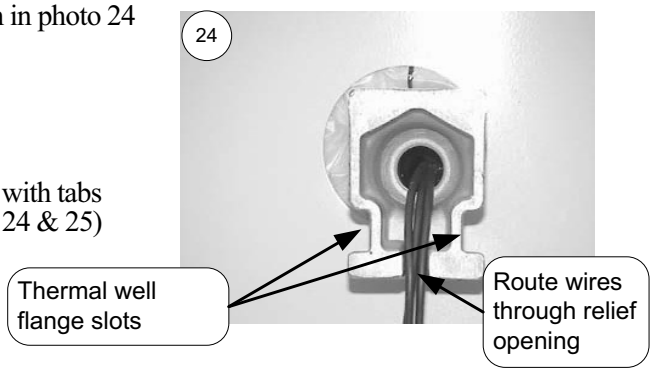

Step 4. Carefully push control back onto thermal well flange as far as possible towards water heater. Slide control down to lock into position.

Step 5. Install burner and connect pilot and feedline to gas control.

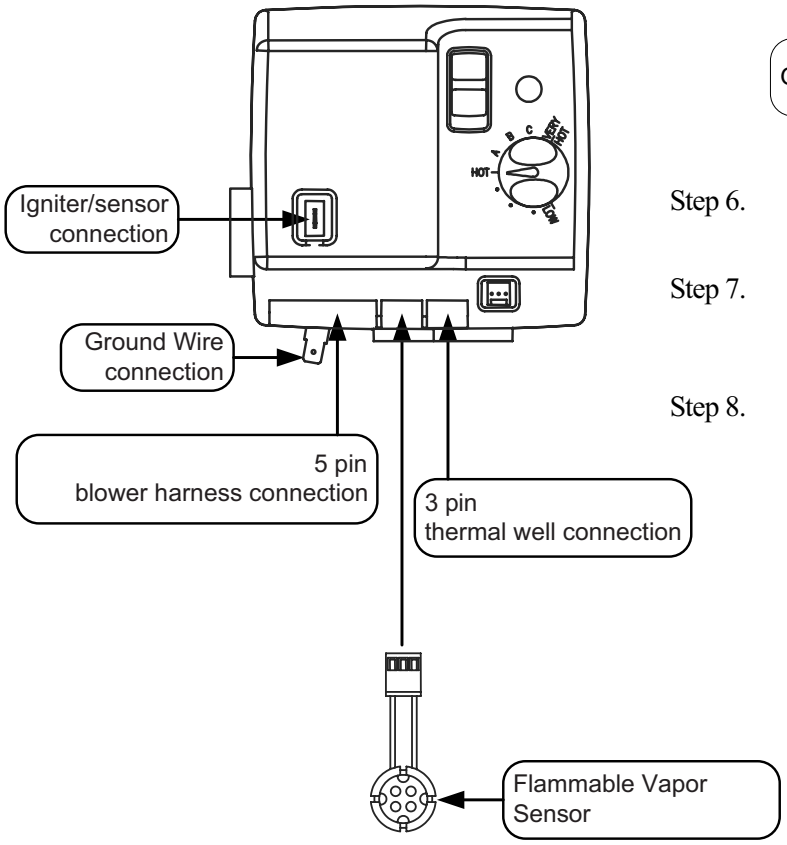

Step 6. Reconnect wire harnesses to gas control per the illustration.

Step 7. Reconnect gas piping to gas control. Restore gas supply and check for gas leaks.

Step 8. To resume operation, follow the instruction located on the lighting instruction label or the lighting instruction located in the installation and operation manual.

Flammable Vapor Device Testing

Step 1. Position power switch on gas control to the "OFF" position.

Step 2. Disconnect flammable vapor sensor from gas control.

Step 3. Using a multi-meter set to the ohms setting check resistance of flammable vapor sensor. (see caution below)
Resistance must be within 3,000 ohms and 48,000 ohms. If outside of this range replace flammable vapor sensor.

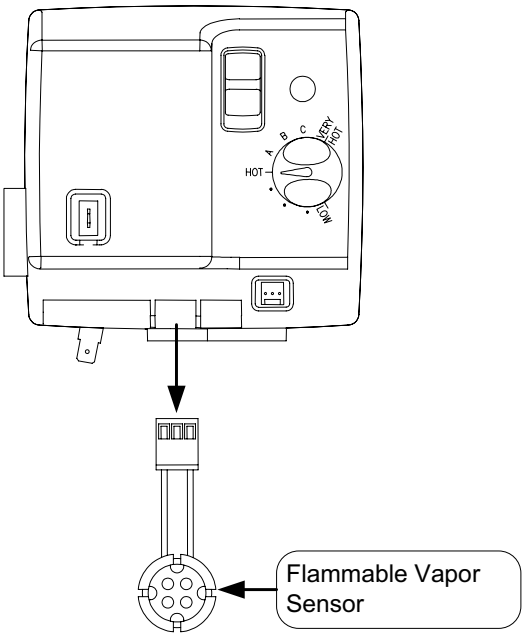

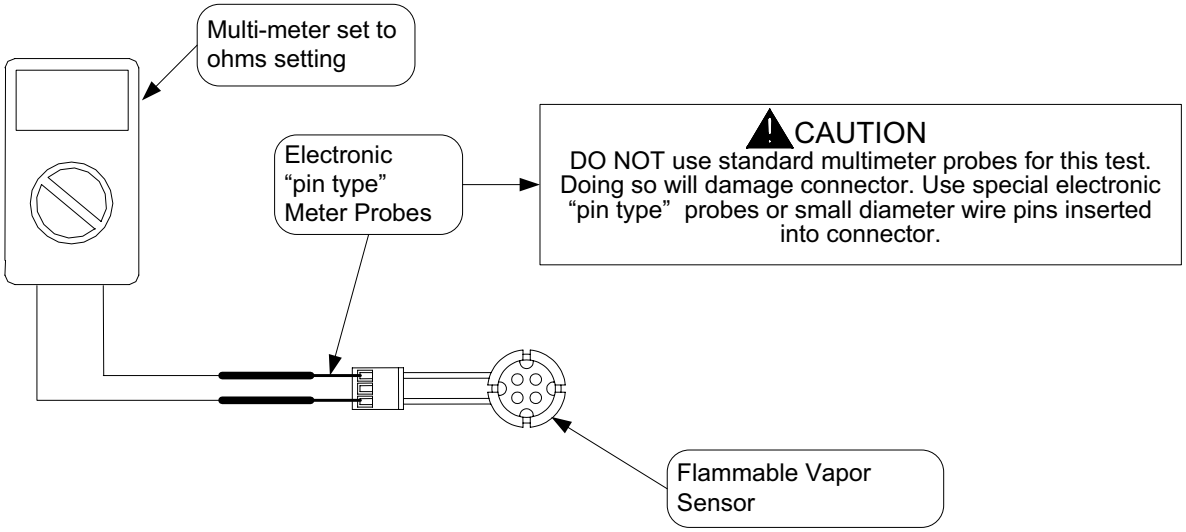

Safety Circuit Voltage Trace

⚠ WARNING
115 volt potential exposure. Use caution making voltage checks to avoid personal injury.

NOTE: This procedure assumes a cool tank.

Remove three screws (Phillips Screw driver) from control access cover on blower and remove cover (see photo 26).

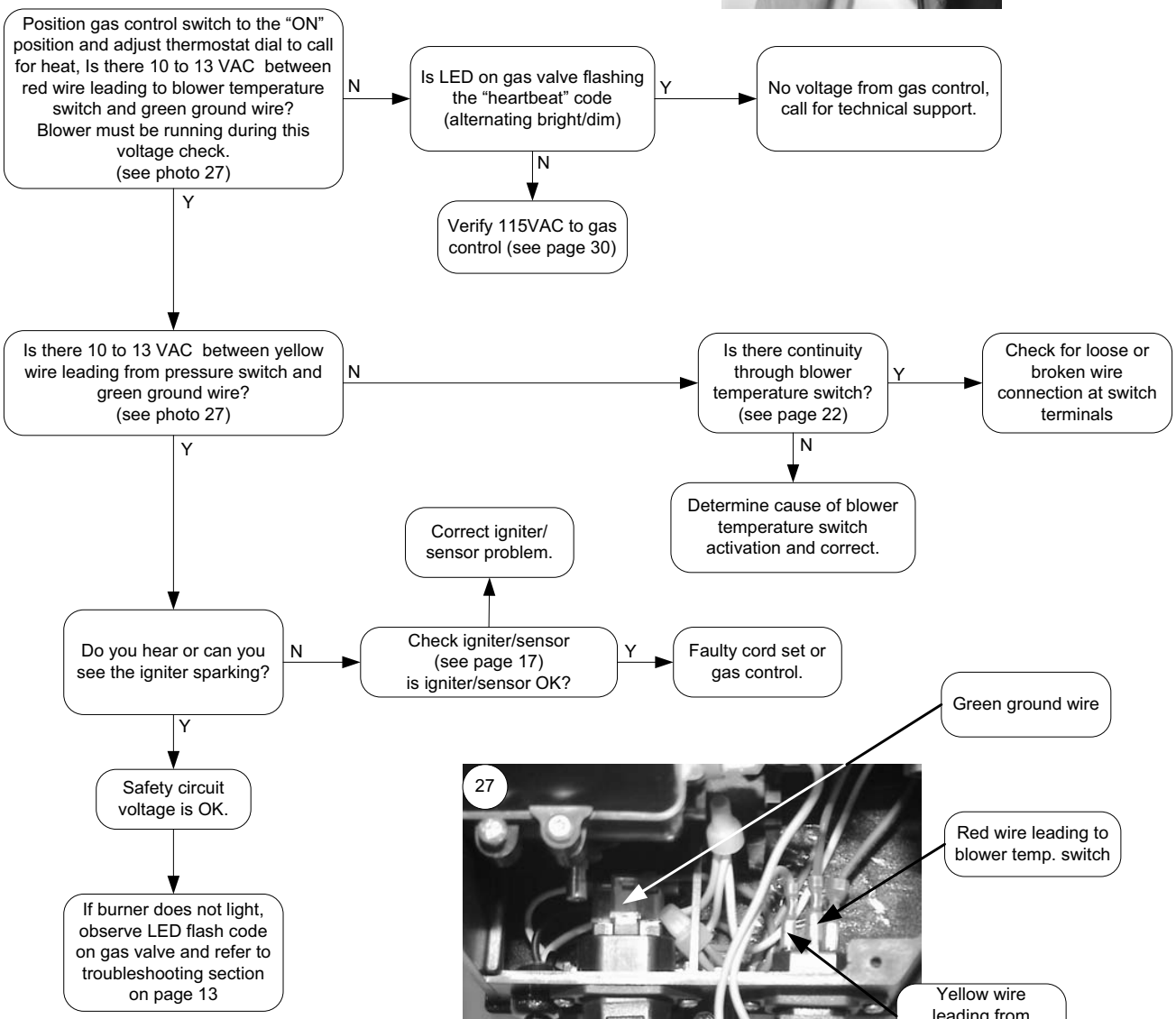

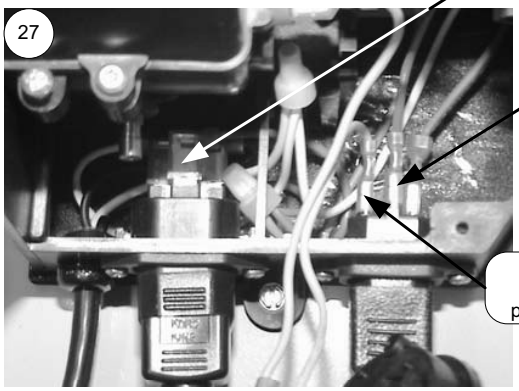

115 VAC Circuit Trace

⚠ WARNING
115 volt potential exposure. Use caution making voltage checks to avoid personal injury.

Step 1. Verify 115VAC and proper polarity at wall outlet.

Step 2. With unit plugged in and control power switch in the “ON” position verify LED status.

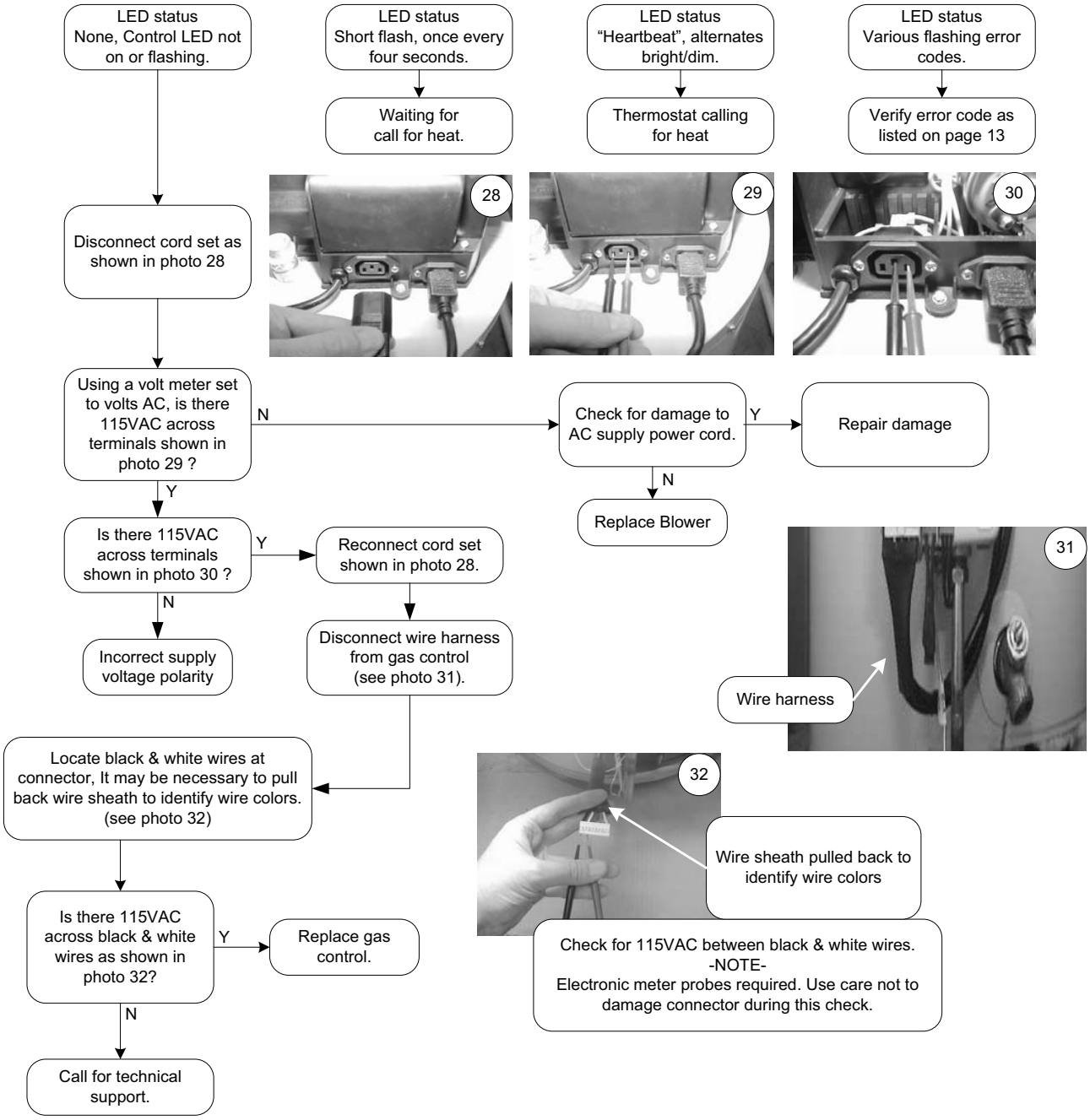

Dip Tube Inspection and Replacement

⚠ WARNING
Water Heater components and stored water may be HOT when performing the following steps in this procedure. Take necessary precaution to prevent personal injury.

Step 1. Position on/off switch of gas control valve to "OFF" position and unplug water heater from wall outlet.

Step 2. Turn off cold water supply to water heater. Connect hose to drain valve of water heater and route to an open drain. Open a nearby hot water faucet to vent heater for draining. Open drain valve of water heater and allow heater to drain to a point below the inlet connection nipple.

Step 3. Disconnect inlet nipple from plumbing system.

Step 4 With an appropriate tool such as a pipe wrench, remove inlet nipple/dip tube from the water heater. Use caution not to damage pipe threads.

Step 5. Visually inspect inlet nipple/dip tube. Inlet nipple/dip tube should be free of cracks and any blockage. Hydro-jet slots should be open and free of any blockage.

Any damage such as cracks, restriction due to deformation or unintentional holes are not field repairable and the inlet nipple/dip tube must be replaced.

Step 6. Upon completion of inspection or subsequent replacement, reinstall inlet nipple/dip tube into water heater. Connect nipple to plumbing system, resume water supply and refill with water.

Step 7. To resume operation follow the instructions located on the lighting instruction label or the lighting instructions located in the installation and operation manual.

Anode Inspection and Replacement

⚠ WARNING
Water Heater components and stored water may be HOT when performing the following steps in this procedure. Take necessary precaution to prevent personal injury.

Step 1. Position on/off switch of gas control valve to the "OFF" position and unplug water heater from wall outlet.

Step 2. Turn off cold water supply to water heater. Connect hose to drain valve of water heater and route to an open drain. Open a nearby hot water faucet to vent water heater for draining. Open drain valve of water heater and allow water heater to drain to a point below the outlet connection nipple.

Step 3. Disconnect outlet nipple from plumbing system.

Step 4 With an appropriate tool such as a pipe wrench, remove outlet nipple/anode from the water heater. Use caution not to damage pipe threads.

Step 5. Visually inspect outlet nipple/anode. Outlet nipple/anode should show signs of depletion, this is normal. If depletion is ½ of the original anode diameter (approximately ¾" diameter), replacement is recommended. If any of the steel core of the anode is exposed, replacement is recommended.

Step 6. Upon completion of inspection or subsequent replacement, reinstall outlet nipple/anode into water heater. Connect nipple to plumbing system, resume water supply and refill with water.

Step 7. To resume operation, follow the instructions located on the lighting instruction label or the lighting instructions located in the installation and operation manual.

Remove blower to gain access to flue baffle

Step 1. Position gas control power switch to the "OFF" position and unplug blower from wall outlet.

Step 2. Disconnect vent system from exhaust adapter on top of blower.

Step 3. Unplug cord sets from blower. (see photo 33).

Step 4. Remove the three blower mounting screws (¼" nut driver) (see photo 33).

Step 5. Remove blower with gasket from water heater.

Step 6. Remove flue baffle from Heater (see photo 34).

Step 7. Inspect baffle for deterioration, missing restrictors. Clean any scale or debris build up. Replace with new baffle as necessary.

Step 8. Reinstall baffle into flue tube. Be sure baffle hanger tab are inserted into notch location at the top of the flue tube (see photos 35 & 36).

Step 9 Check Burner to insure no scale has accumulated during this operation. See burner cleaning procedure on page 15.

Step 10. Reinstall blower on water heater. Connect vent system and cord sets to blower. Plug water heater into wall outlet.

Step 11. To resume operation follow the lighting instruction located on the lighting instruction label or the lighting instruction located in the installation and operation manual.

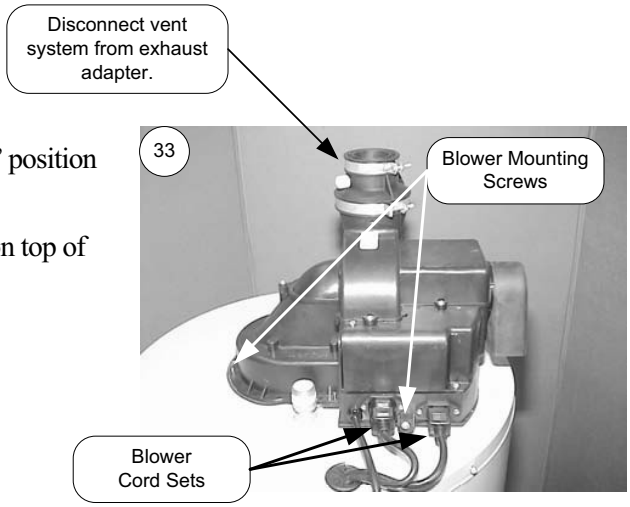

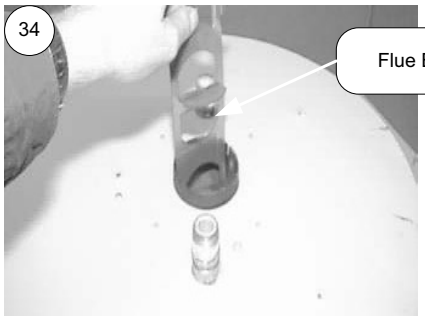

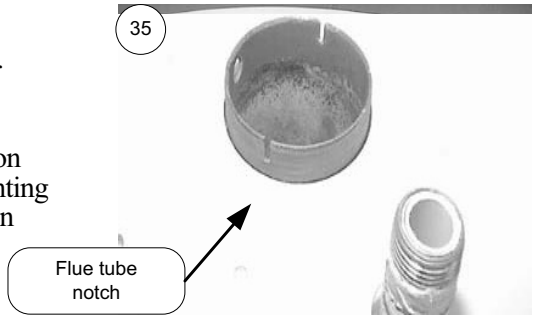

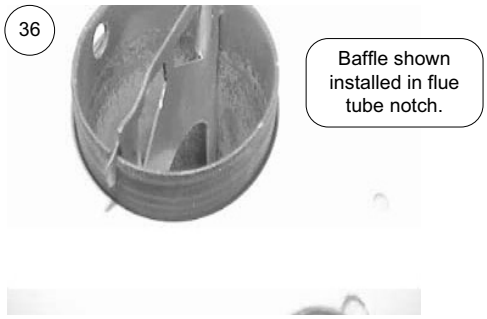

Inner Door Removal Procedure

Step 1. Position gas control power switch to the "OFF" position.

Step 2. Remove outer jacket burner access door

Step 3. Inner Door Removal.

a) Remove (2) 1/4" hex drive screws from right side inner door.
b) Remove (2) 1/4" drive screws from flange section of inner door.
c) Remove (2) 1/4" drive screws from left side inner door.
d) Remove inner door and inspect per step 4.

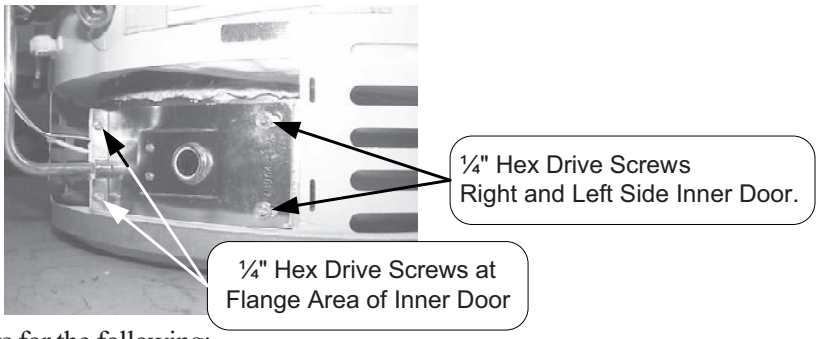

Step 4. Fully inspect inner door gaskets for the following:

>Tears
>Missing Material
>Cracks
>Dirt or debris
>Other imperfections that will inhibit proper seal
>Gasket adhesion to inner door
>Material left on combustion chamber (around opening)

If the gasket is not effected by any of the above, gasket replacement is not required. If replacement is required, proceed to **Inner Door Gasket Replacement Procedure.**

Inner Door Gasket Replacement Procedure.

⚠ WARNING
If the information in these instructions is not followed exactly, a fire or explosion may result causing property damage, personal injury or death.

Step 5. After inspection of inner door as noted in step 4, completely remove gasket and adhesive residue from right and left side inner doors as needed.

Step 6. Use RTV sealant (recommended bead size 1/8") to secure the inner door gasket to the inner door sections (right & left). Refer to illustration on next page for proper application. Note the overlap configuration in the flange area of the inner door. Set the flange section first, this will help to achieve the proper over lap position.

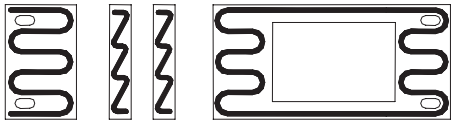

RECOMMENDED PATTERN
FOR RTV SEALANT

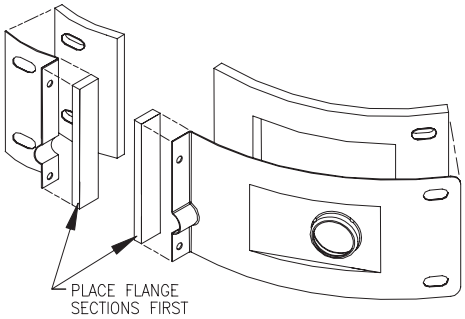

EXPANDED VIEW

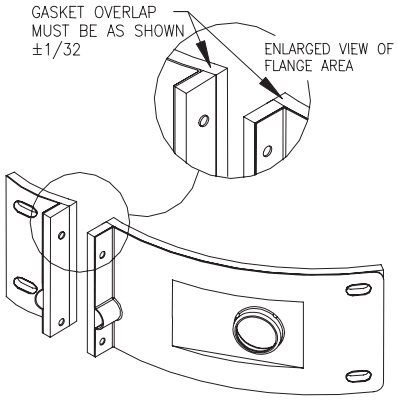

VIEW WITH GASKETS
IN PLACE

Installation of Inner Door With Gasket.

Step 7. Clean any residual gasket residue or other debris from combustion chamber surface before installing the inner door/gasket assembly.

Step 8. Place the left side inner door into position first. Firmly position the radiused channel of the inner door around the feedline. Using the 1/4" hex drive screws from step 3c, secure left side inner door in place. **DO NOT OVER TIGHTEN SCREWS.**

Step 9 Position pilot tube and igniter/sensor wire against left side inner door flange gasket. **DO NOT ROUTE THROUGH RADIUSED CHANNEL WITH FEEDLINE.**

⚠ WARNING
Stripped fastener connections may allow for seal breach of inner door. A seal breach may result in a fire or explosion causing property damage, personal injury or death. Do not over tighten screws in steps 8, 10 and 11.

If a fastener connection is stripped, contact the manufacturer listed on the water heater rating plate.

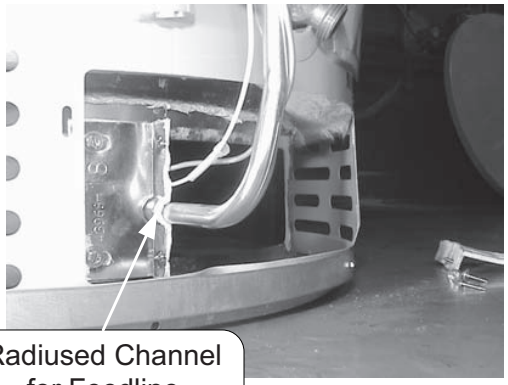

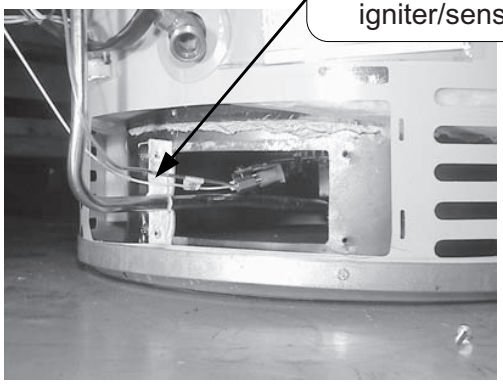

Step 10. Firmly place right side inner door flange against the left side inner door flange and secure with two ¼" drive screws from step 3b. **DO NOT OVER TIGHTEN SCREWS**.

Step 11. Align right side inner door to combustion chamber and verify the fastener holes of the combustion chamber are aligned with the right side inner door slotted opening. Verify seal integrity around combustion opening. Secure right side inner door using 1/4" hex drive screws from step 3a. **DO NOT OVER TIGHTEN SCREWS.** Verify both left and right sides of the inner door are properly positioned and sealed against the combustion chamber.

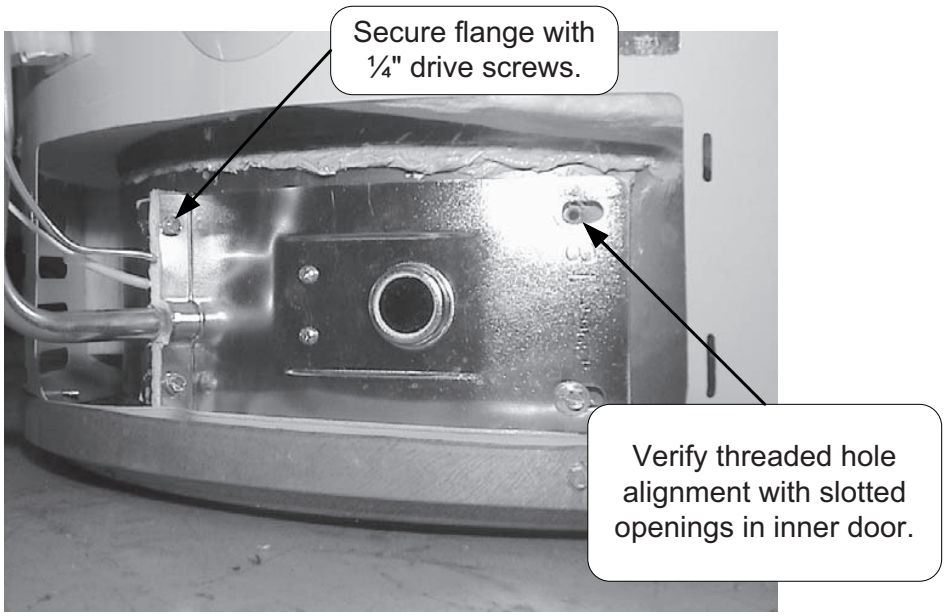

Step 12. Replace outer jacket burner access door.

Step 13. To resume operation follow the instructions located on the lighting instruction label or the lighting instructions located in the installation and operation manual.

ScreenLok® Flame Arrestor Cleaning:

Step 1. Position Gas Control Power Switch to the OFF position.

Step 2. Remove outer jacket.

Step 3. Remove inner door per TTW SERVICE PROCEDURE XIII, step 3a through step 3d.

Step 4. Disconnect main burner feed line (3/4 wrench), pilot tube (7/16 wrench) and igniter/flame sensor wire from gas control and remove burner assembly from combustion chamber.

Step 5. Clean ScreenLok® Flame Arrestor using stiff brush, compressed air and/or shop vacuum to remove any scale or other debris accumulation. Using a soft brush, clear jacket openings from any dirt, dust, restrictions or other obstructions.

Step 6. Remove any debris from burner assembly per TTW SERVICE PROCEDURE I and reinstall burner assembly into combustion chamber.

Step 7. Reconnect feedline, pilot tube and igniter/flame sensor wire to the gas control.

Step 8. Reinstalll inner door per TTW SERVICE PROCEDURE XIII, step 7 through step 12.

Step 9. To resume operation follow the instructions located on the lighting instruction label or the lighting instruction located in the installation and operation manual.

BTU	British Thermal Units
GPM	Gallons per Minute
Hz	Hertz
KW/h	Killo-watts per hour
LED	Light Emitting Diode
NPT	National Pipe Thread
Ohms	Ohms of resistance
PSI	Pounds per Square Inch
RPM	Revolutions per Minute
TCO	Temperature Cut Off
VAC	Volts Alternating Current
W.C.	Inches of Water Column
°C	Degrees Centigrade
°F	Degrees Fahrenheit

NOTES

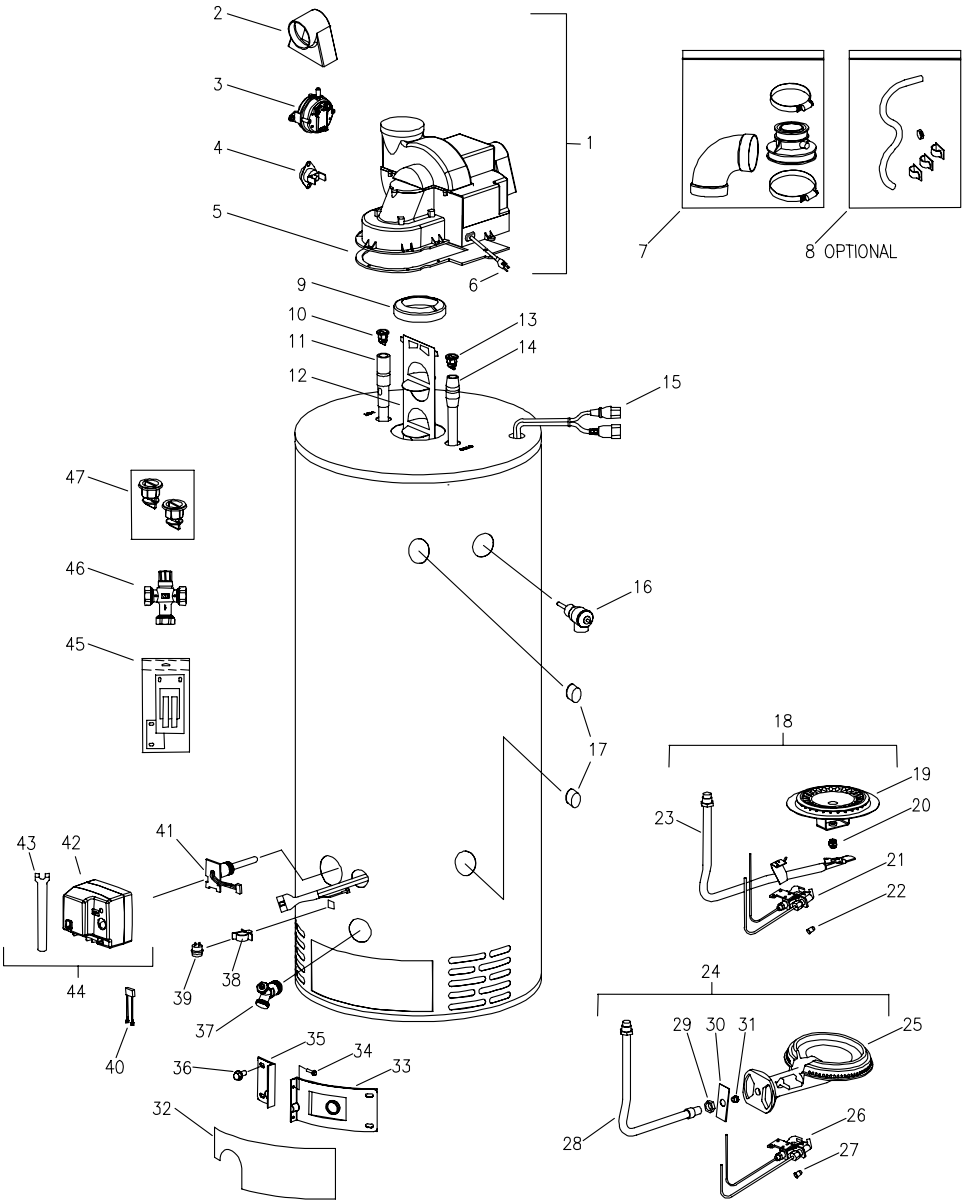

1. Blower Complete
2. Air Mixing Inlet cover
3. Pressure Switch
4. Blower Temp. Switch
5. Blower Gasket
6. Blower Power Cord
7. Vent Adapter w/vent term.
8. Condensate Hose Kit
9. Flue Reducer (M2 only)
10. Heat Trap Outlet
11. Hot Water Outlet Anode
12. Flue Baffle
13. Heat Trap Inlet
14. Inlet Dip Tube
15. Wire Harness
16. T&P Valve
17. ¾ NPT Plug
18. Burner Assy. (Nat)
19. Burner Head
20. Main Burner Orifice
21. Pilot Assy. (Nat)
22. Pilot Orifice
23. Feedline
24. Burner Assy. (L.P.)
25. Cast Iron Burner
26. Pilot Assy. (L.P.)
27. Pilot Orifice (L.P.)
28. Feedline
29. Jam Nut
30. Air Shutter
31. Main Burner Orifice (L.P.)
32. Outer Door
33. Right Side Inner Door
34. Screw #8-15 x 3/4
35. Left Side Inner Door
36. Screw #10-12 x 3/4
37. Brass Drain Valve
38. Flammable Vapor Sensor Clip
39. Flammable Vapor Sensor
40. Sensor Harness
41. Thermal Well
42. Gas Control
43. Gas Control Service Tool
44. Kit-Gas Control
45. Inner Door Gasket Kit
46. ASSE App'vd Mixing Valve
47. Kit-Heat Trap Insert

BRADFORD WHITE®
WATER HEATERS
Ambler, PA

For U.S. and Canada field service,
contact your professional installer or
local Bradford White sales representative.

Sales/**800-523-2931**
*Fax/**215-641-1670***
*Parts Fax/**215-641-2180***

Technical Support/**800-334-3393**
*Fax/**269-795-1089***

Warranty/**800-531-2111**
*Fax/**269-795-1089***

International:
Telephone/**215-641-9400**
*Telefax/**215-641-9750***

BRADFORD WHITE-CANADA® INC.
Mississauga, ON

Sales/**866-690-0961**
905-238-0100

*Fax/**905-238-0105***

Technical Support/**800-334-3393**

Email
parts@bradfordwhite.com
techserv@bradfordwhite.com

www.bradfordwhite.com